Laird TECHNOLOGIES

Innovative **Technology** for a **Connected** World

DA PowerCool Series, DA-034-24-02

Thermoelectric Assembly

POWERCOOL SERIES DIRECT-TO-AIR THERMOELECTRIC ASSEMBLY

The DA PowerCool Series is a Direct-to-Air thermoelectric assembly (TEA) that uses impingement flow to transfer heat. It offers dependable, compact performance by cooling objects via conduction. Heat is absorbed through a cold plate and dissipated thru a high density heat exchanger equipped with an air ducted shroud and brand name fan. The thermoelectric modules are custom designed to achieve a high coefficient of performance (COP) to minimize power consumption. This product series is available in a wide range of cooling capacities and voltages. Custom configurations and moisture protection options are available, however, MOQ applies.

FEATURES ✓RoHS

- Compact design
- Precise temperature control
- Reliable solid-state operation
- DC operation
- RoHS compliant

APPLICATIONS

- Analytical instrumentation
- Medical diagnostics
- Photonics laser systems
- Industrial instrumentation
- Food and beverage cooling

Specifications	
Cooling Power Qcmax (W)	34
Running Current (A)	1.9
Startup Current (A)	2.6
Nominal Voltage (V)	24
Max Voltage (V)	27
Power Input (W)	46
Operating Temperature (°C)	-10 to 46
Weight (kg)	0.45
MTBF (fans – hrs)	50,000
Performance Tolerance	±10%

PERFORMANCE CURVE

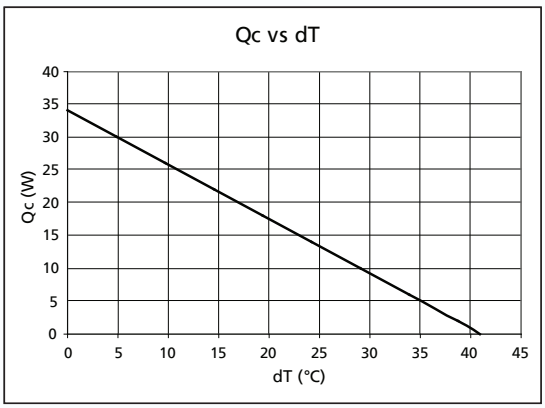

global solutions: local support™

Americas: +1.888.246.9050
Europe: +46.31.704.67.57
Asia: +86.755.2714.1166

CLV-customerservice@lairdtech.com
www.lairdtech.com/thermal

Innovative **Technology** for a **Connected** World

DA PowerCool Series, DA-034-24-02

Thermoelectric Assembly

ISOMETRIC DRAWINGS

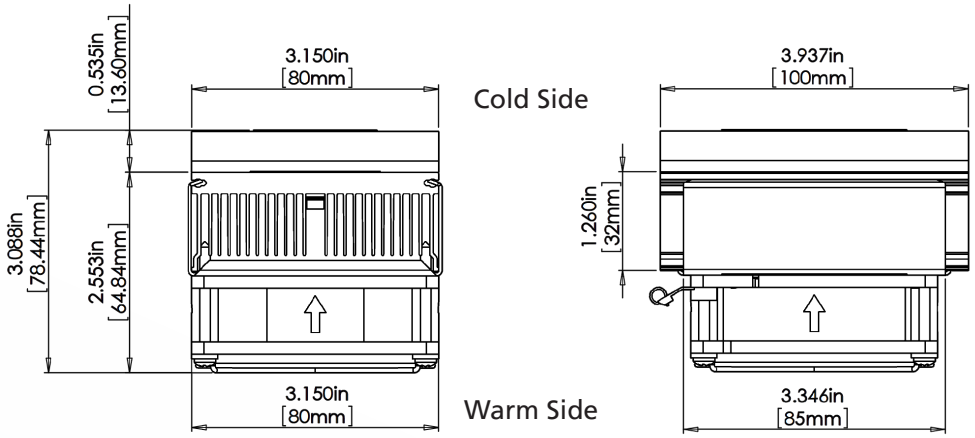

MOUNTING HOLE LOCATION

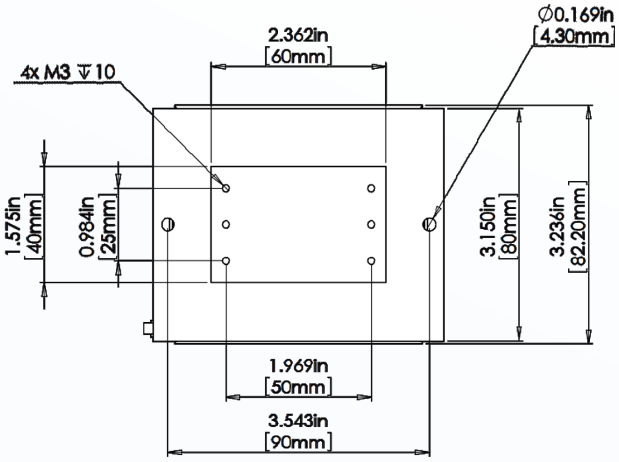

WIRING SCHEMATIC

Electrical connections

TEM+ : Pink
TEM- : Green
Fan+ : Purple
Fan- : Blue

NOTES

For indoor use only.
Thermally conductive grease enclosed.

Any information furnished by Laird Technologies, Inc. and its agents is believed to be accurate and reliable. All specifications are subject to change without notice. Responsibility for the use and application of Laird Technologies materials rests with the end user, since Laird Technologies and its agents cannot be aware of all potential uses. Laird Technologies makes no warranties as to the fitness, merchantability or suitability of any Laird Technologies materials or products for any specific or general uses. Laird Technologies shall not be liable for incidental or consequential damages of any kind. All Laird Technologies products are sold pursuant to the Laird Technologies' Terms and Conditions of sale in effect from time to time, a copy of which will be furnished upon request. © Copyright 2010 Laird Technologies, Inc. All Rights Reserved. Laird, Laird Technologies, the Laird Technologies Logo, and other marks are trade marks or registered trade marks of Laird Technologies, Inc. or an affiliate company thereof. Other product or service names may be the property of third parties. Nothing herein provides a license under any Laird Technologies or any third party intellectual property rights.