Laird TECHNOLOGIES

Innovative **Technology** for a **Connected** World

Q Series, TC-18-QC-50
Temperature Controller

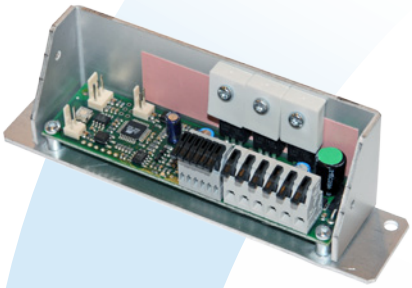

Q SERIES TEMPERATURE CONTROLLER

The Q Series thermostatic controller is a microcontroller based device that can be incorporated into a thermoelectric assembly (TEA) to add integrated temperature control. This controller functions as a cooling control device and features an adjustable temperature set point range from 0°C to 10°C. The Q Series controller provides a single directional temperature control for standard or custom thermostatic control with several input and output options. Custom configurations are available, however MOQ applies.

FEATURES RoHS

- Operation in cooling mode.
- Regulation mode is ON/OFF at the programmed set point and hysteresis.
- Input power range can accommodate 11 to 58 VDC, nominally 12 to 48 VDC.
- Outputs are available for fan, thermoelectric module, NTC thermistor, tachometer sensor, overheating thermostat switch, alarm, and LED. Some features sold on custom configurations only.

BENEFITS

- The controller's temperature set point can be adjusted with an internal potentiometer in the interval range of 0°C to 10°C.
- Tachometer sensor inputs provided to measure the speed of two fans. Sold on custom configurations only.
- Overheating thermostat switch input available to sense an over temperature condition and will turn off power to TEA. A thermostat is required for operation.
- Alarm and LED outputs available to indicate functional status of controller.

MARKETS

- Medical diagnostics
- Analytical instrumentation
- Photonics laser systems
- Electronic enclosure cooling
- Chillers (liquid cooling)

ISOMETRIC DRAWINGS

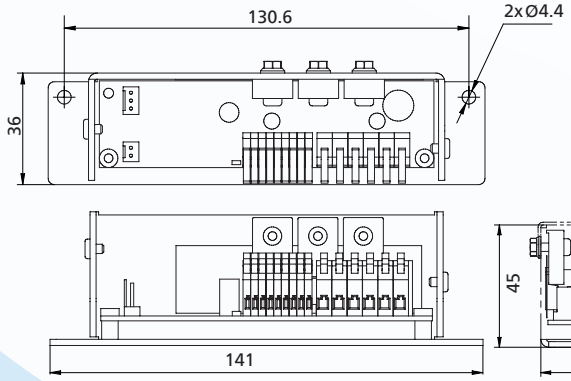

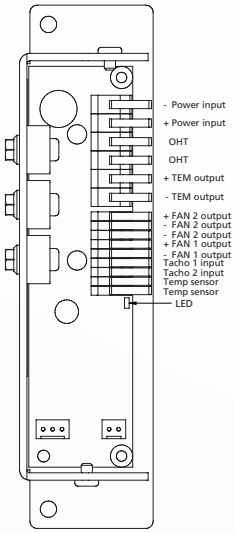

global solutions: local support™

Americas: +1.888.246.9050
Europe: +46.31.704.67.57
Asia: +86.755.2714.1166

CLV-customerservice@lairdtech.com
www.lairdtech.com/thermal

Laird TECHNOLOGIES

Innovative **Technology** for a **Connected** World

Q Series, TC-18-QC-50
Temperature Controller

Specifications	
Power	
Voltage	11 to 58 VDC
Current	8 A without added cooling / 16 A with added cooling
Power	786 W @ 48 VDC Max, 384 W @ 24 VDC Max, 192 W @ 12 VDC Max
User Interface	
	Onboard Potentiometer
Sensors	
Temp Sensor	NTC Thermistor
Fan Tachometer 1	Use with fans w/ an open collector tachometer
Fan Tachometer 2	Use with fans w/ an open collector tachometer
Outputs	
Thermoelectric Module	Supply voltage @ ≤16 A
Fan 1	Supply voltage @ 2 A
Fan 2	Supply voltage @ 2 A
Alarm Relay	Open collector, Opto-isolated
Overheating Thermostat	Overheating protection
LED	Status/Errors
Alarms	
Low Voltage	If voltage is lower than programmed minimum level the outputs are shut down after a programmed time
High Voltage	Outputs are shut down instantly
Tachometer 1 & 2*	If the RPM signal is lower than the programmed minimum level, error is indicated.
Max Voltage	VCEO = 35 V, VECO = 6 V
Max Current	Ic = 50 mA
Note: All programming of parameters are conducted by Laird Technologies	
Temperature Regulation:	
ON/OFF mode	Controller switches the TEM output between full power and zero power at the programmed set point and hysteresis
Programmed Control Set Point	Cooling at 5°C, Off at 2°C
Trim Range	± 5°C
Accuracy	± 1°C
Protection	
	Over and under voltage
	Reverse polarity

* Feature sold on custom units only.

Any information furnished by Laird Technologies, Inc. and its agents is believed to be accurate and reliable. All specifications are subject to change without notice. Responsibility for the use and application of Laird Technologies materials rests with the end user. Laird Technologies makes no warranties as to the fitness, merchantability, suitability or non-infringement of any Laird Technologies materials or products for any specific or general uses. Laird Technologies shall not be liable for incidental or consequential damages of any kind. All Laird Technologies products are sold pursuant to the Laird Technologies' Terms and Conditions of sale in effect from time to time, a copy of which will be furnished upon request. © Copyright 2011 Laird Technologies, Inc. All Rights Reserved. Laird, Laird Technologies, the Laird Technologies Logo, and other marks are trade marks or registered trade marks of Laird Technologies, Inc. or an affiliate company thereof. Other product or service names may be the property of third parties. Nothing herein provides a license under any Laird Technologies or any third party intellectual property rights.