Laird TECHNOLOGIES

Innovative **Technology** for a **Connected** World

AA Tunnel Series, AA-027-12-22

Thermoelectric Assembly

TUNNEL SERIES AIR-TO-AIR THERMOELECTRIC ASSEMBLY

The AA Tunnel Series is an Air-to-Air thermoelectric assembly (TEA) that minimizes the number of airflow paths required to operate. It offers dependable, compact performance by cooling objects via convection. Heat is absorbed and dissipated through high density heat exchangers equipped with air ducted shrouds and brand name fans. The thermoelectric modules are custom designed to achieve a high coefficient of performance (COP) to minimize power consumption. Custom configurations are available, however, MOQ applies.

FEATURES ✓RoHS

- Tunnel Series compact design
- Precise temperature control
- Reliable solid-state operation
- DC operation
- RoHS compliant

APPLICATIONS

- Analytical instrumentation
- Medical diagnostics
- Photonics laser systems
- Industrial instrumentation
- Food and beverage cooling

Specifications	
Cooling Power Qcmax (W)	28.5
Running Current (A)	3.1
Startup Current (A)	4.0
Nominal Voltage (V)	12
Max Voltage (V)	15
Power Input (W)	37.2
Operating Temperature (°C)	-10 to 39
Weight (kg)	1.0
MTBF (fans – hrs)	50,000
Performance Tolerance	±10%

PERFORMANCE CURVE

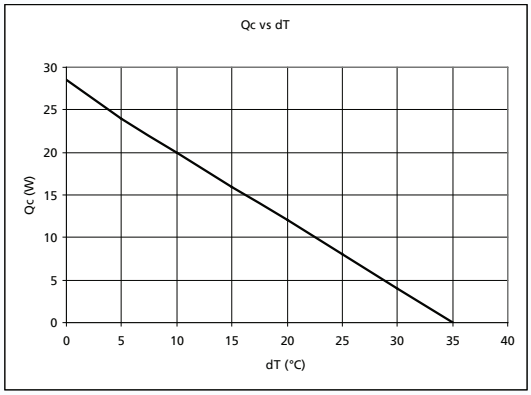

global solutions: **local** support™

Americas: +1.888.246.9050
Europe: +46.31.704.67.57
Asia: +86.755.2714.1166

CLV-customerservice@lairdtech.com
www.lairdtech.com/thermal

Innovative **Technology**
for a **Connected** World

AA Tunnel Series, AA-027-12-22

Thermoelectric Assembly

ISOMETRIC DRAWINGS

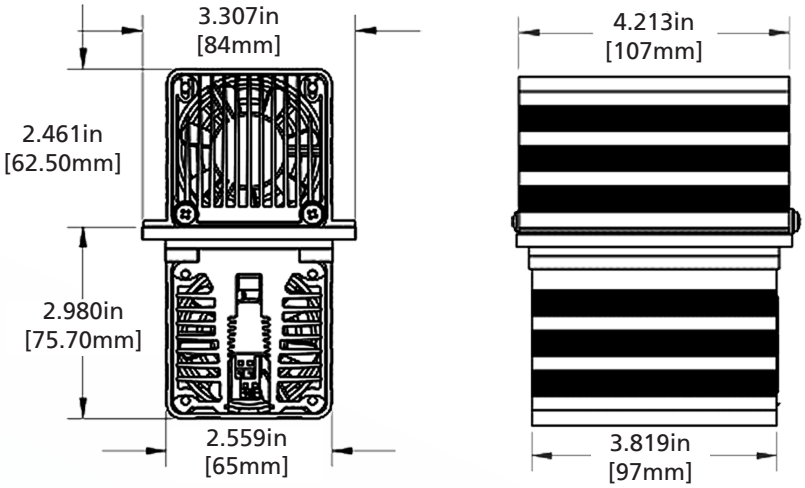

MOUNTING HOLE LOCATION

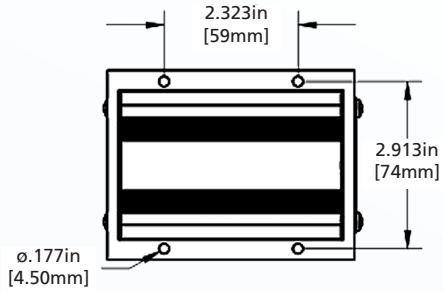

WIRING SCHEMATIC

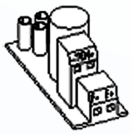

Electrical Connections

"TEM+": + TEM
"TEM-": - TEM
"F+": + Fan(s)
"F-": - Fans(s)

NOTES

Four (4) mounting screws enclosed. For indoor use only.

Any information furnished by Laird Technologies, Inc. and its agents is believed to be accurate and reliable. All specifications are subject to change without notice. Responsibility for the use and application of Laird Technologies materials rests with the end user, since Laird Technologies and its agents cannot be aware of all potential uses. Laird Technologies makes no warranties as to the fitness, merchantability or suitability of any Laird Technologies materials or products for any specific or general uses. Laird Technologies shall not be liable for incidental or consequential damages of any kind. All Laird Technologies products are sold pursuant to the Laird Technologies' Terms and Conditions of sale in effect from time to time, a copy of which will be furnished upon request. © Copyright 2009 Laird Technologies, Inc. All Rights Reserved. Laird, Laird Technologies, the Laird Technologies Logo, and other marks are trade marks or registered trade marks of Laird Technologies, Inc. or an affiliate company thereof. Other product or service names may be the property of third parties. Nothing herein provides a license under any Laird Technologies or any third party intellectual property rights.