Laird TECHNOLOGIES

Innovative **Technology** for a **Connected** World

# Ceramic Plate Series CP08,31,06

## Thermoelectric Modules

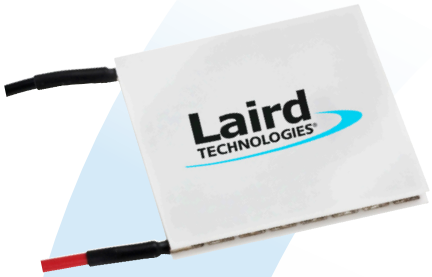


The Ceramic Plate (CP) Series of Thermoelectric Modules (TEMs) is considered 'the standard' in the thermoelectric industry.

This broad product line of high-performance and highly reliable TEMs is available in numerous heat pumping capacities, geometric shapes, and input power ranges. Assembled with Bismuth Telluride semiconductor material and thermally conductive Aluminum Oxide ceramics, the CP Series is designed for higher current and large heat-pumping applications.

### Features

- Precise Temperature Control
- Compact Geometric Sizes
- Reliable Solid State Operation
- No Sound or Vibration
- Environmentally Friendly
- DC Operation
- RoHS Compliant

### Applications

- Medical Lasers
- Lab Science Instrumentation
- Clinical Diagnostic Systems
- Photonics Laser Systems
- Electronic Enclosure Cooling
- Food & Beverage Cooling
- Chillers (Liquid Cooling)

| Performance Specifications | | |
|---|---|---|
| **Hot Side Temperature (°C)** | 25°C | 50°C |
| **Qmax (Watts)** | 4.5 | 4.9 |
| **Delta Tmax (°C)** | 67 | 75 |
| **Imax (Amps)** | 2.1 | 2.1 |
| **Vmax (Volts)** | 3.7 | 4.0 |
| **Module Resistance (Ohms)** | 1.54 | 1.74 |

| Suffix | Thickness (prior to Tinning) | Flatness & Parallelism | Hot Face | Cold Face | Lead Length |
|---|---|---|---|---|---|
| **L** | 0.134″± 0.010″ | 0.0015″ / 0.0015″ | Lapped | Lapped | 4.5″ |
| **L1** | 0.134″± 0.001″ | 0.001″ / 0.001″ | Lapped | Lapped | 4.5″ |
| **L2** | 0.134″± 0.0005″ | 0.0005″ / 0.0005″ | Lapped | Lapped | 4.5″ |
| **ML** | 0.138″± 0.010″ | 0.002″ / 0.002″ | Metallized | Lapped | 4.5″ |
| **LM** | 0.138″± 0.010″ | 0.002″ / 0.002″ | Lapped | Metallized | 4.5″ |
| **MM** | 0.142″± 0.010″ | 0.002″ / 0.002″ | Metallized | Metallized | 4.5″ |

### Sealing Option

| Suffix | Sealant | Color | Temp Range | Description |
|---|---|---|---|---|
| **RT** | RTV | White | -60 to 204 °C | Non-corrosive, silicone adhesive sealant |
| **EP** | Epoxy | Black | -55 to 150 °C | Low desity syntactic foam epoxy encapsulant |


**global solutions: local support**™

Americas: +1 888.246.9050
Europe: +46.31.420530
Asia: +86.755.2714.1166

clv.customerpos@lairdtech.com
www.lairdtech.com

Laird TECHNOLOGIES

Innovative **Technology** for a **Connected** World

# Ceramic Plate Series CP08,31,06

## Thermoelectric Modules

### Performance Curves at Th = 25°C

**Thermo**

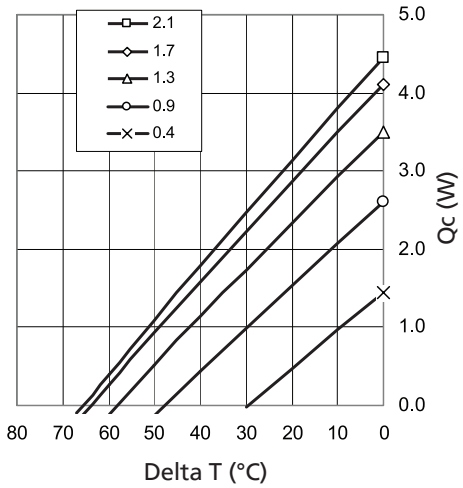


**Electric**

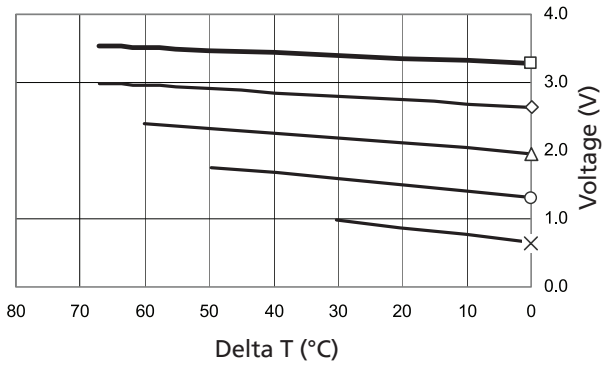


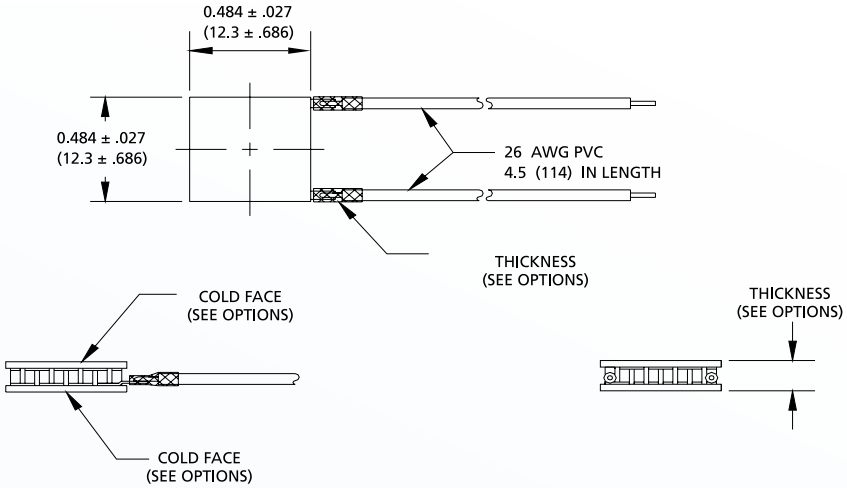


Ceramic Material: Alumina ($Al_2O_3$)
Solder Construction: 138°C, Bismuth Tin (BiSn)

## Operating Tips

- Max Operating Temperature: 80°C
- Do not exceed Imax or Vmax when operating module
- Reference assembly guidelines for recommended installation
- Solder tinning also available on metallized ceramics



Any information furnished by Laird Technologies and its agents is believed to be accurate and reliable. Responsibility for the use and application of Laird Technologies materials rests with the end user since Laird Technologies and its agents cannot be aware of all potential uses. Laird Technologies makes no warranties as to the fitness, merchantability, or suitability of any Laird Technologies materials or products for any specific or general uses. Laird Technologies shall not be liable for incidental or consequential damages of any kind. All Laird Technologies products are sold pursuant to the Laird Technologies terms and conditions of sale in effect from time to time, a copy of which will be furnished upon request. For further information please visit our website at www.lairdtech.com Alternatively contact: sales@lairdtech.com. Bluetooth® is a trademark owned by Bluetooth SIG, Inc., USA and licensed to Laird Technologies.

® 2008 All Rights Reserved. Laird Technologies is a registered trademark of Laird Technologies, Inc.