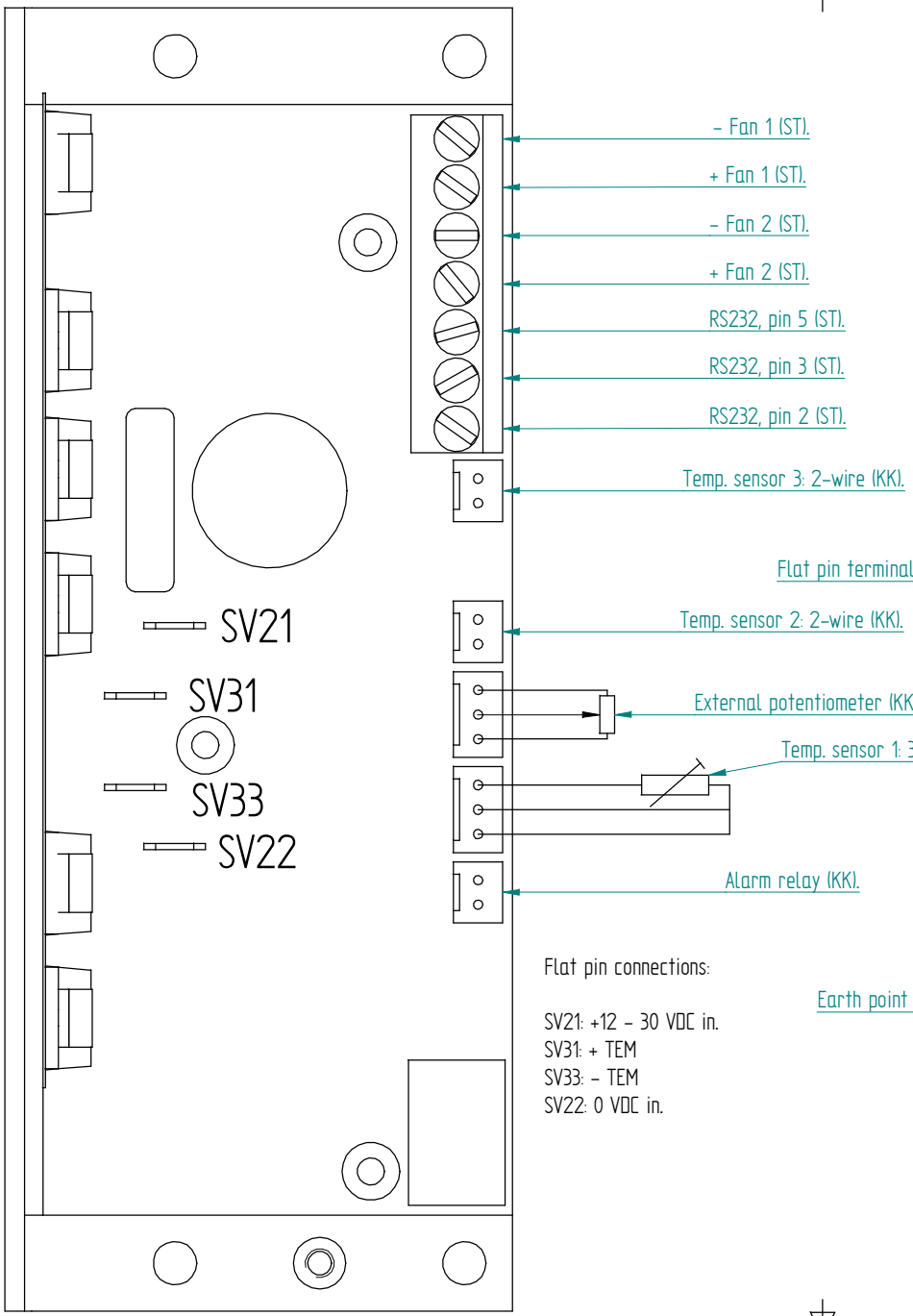

Flat pin connections:

SV21: +12 - 30 VDC in.
SV31: + TEM
SV33: - TEM
SV22: 0 VDC in.

Specification: (Ta=32°C)	Code:	Description:
Heat transfer, cold side:	X	-
Heat transfer, warm side:	X	-
Cascade:	-	
Cooling power: [W]	X	-
Voltage, nominal: [VDC]	24	12 or 24 VDC, Programmable
Voltage: [VDC] Current: [A]		Nominal: 12 / 24 VDC, Range: 10 - 30 VDC. Max: 15 A.
Fan(s), cold side:	X	-
Fan(s), warm side:	X	-
Temperature controller, sensor:	P	PWM (PID), NTC.
Temperature control settings, trim options:	R	Programmable (reversible). Sensor dependent, software selectable.
Additional controller information:		Accuracy / Hysteresis: Sensor dependent / Software selectable.
Temperature control position:	5	Remote (Standalone)
Options:	9	Low voltage protection: Software selectable. Alarm relay.
Weight:		0.2 kg
Overheating thermostat:		NTC-sensor on PCB heat sink.
Operating temperature:		-40°C to +52°C at nominal voltage.
Storage temperature:		-45°C to +70°C.
Enclosed:		Installation CD incluing manual. NTC-sensor (REL-09030). 3-wire sensor cable (0.7m).
Packing:		Individual cardboard box.

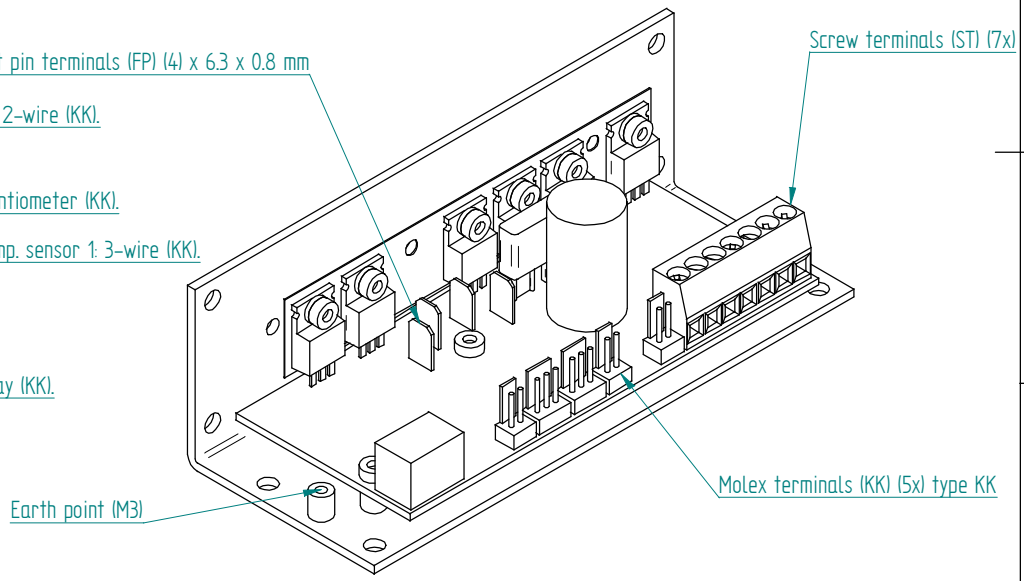

Comments / deviations:
Drawing is only intended to display basic layout. Use manual for details.

General tolerances: SS-ISO 2768-1 c

Designed by:	Approved by:	Release date:	Customer:	Project:
Henrik Höjer	Johan Seiberlich	20050217	Supercool AB	PR-59

Supercool AB
Box 27, S-40120 Göteborg, Sweden
tfn: +46 31 420530, fax: +46 31 247909
e-mail: info@supercool.se
Web: www.supercool.se

Title: TEMP CONTROL MULTI PID PROGR 10-30V

Part nr:	Rev. nr.	Status:	Scale:	Size, sheet
TC-24-PR-59	1	0	1:1	A3, 1(2)

This drawing is the property of Supercool AB. Protected in accordance with prevailing law.

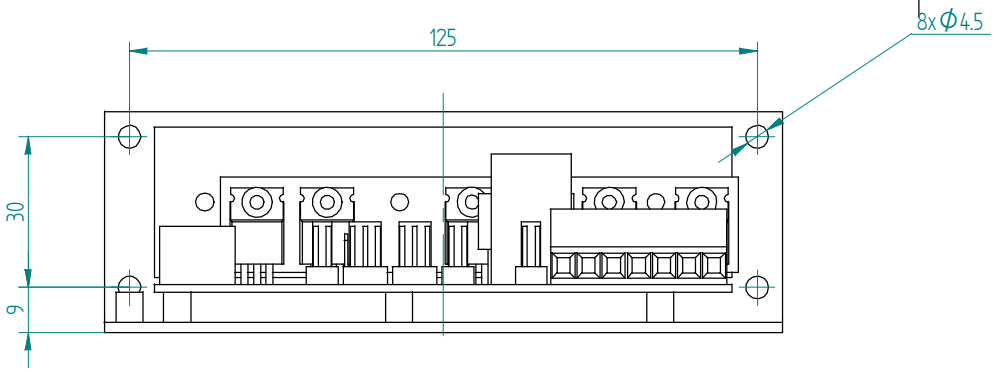

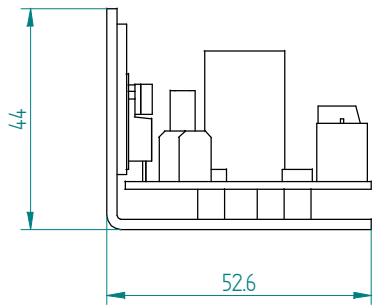

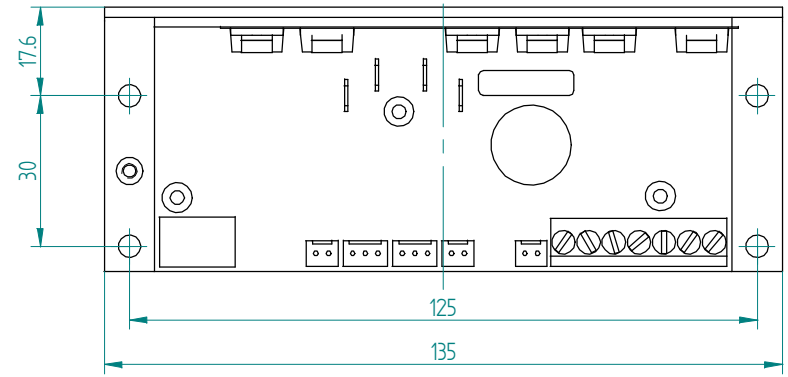

Revision notes and dates (yymmdd):

Rev. 0: 050217, First issue.

Comments / deviations: Drawing is only intended to display basic layout. Use manual for details.				General tolerances: SS-ISO 2768-1 c
Designed by: Henrik Höjer	Approved by: Johan Seiberlich	Release date: 20050217	Customer: Supercool AB	Project: PR-59
Supercool®	Supercool AB Box 27, S-40120 Göteborg, Sweden tfn: +46 31 420530, fax: +46 31 247909 e-mail: info@supercool.se Web: www.supercool.se	Title: TEMP CONTROL MULTI PID PROGR 10-30V		
		Part nr: TC-24-PR-59	Rev. nr.: 1	Status: 0 / Scale: / Size, sheet

This drawing is the property of Supercool AB. Protected in accordance with prevailing law.