Laird TECHNOLOGIES

Innovative **Technology** for a **Connected** World

ThermaTEC™ Series HT6,7,F2,3030

Thermoelectric Modules

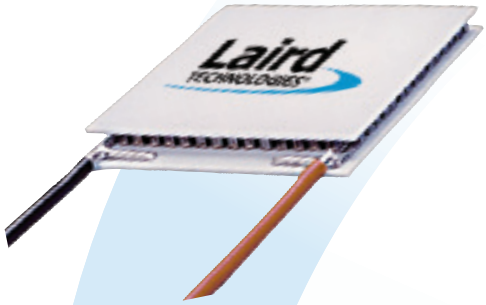

The ThermaTEC™ Series of thermoelectric modules (TEMs) are designed to operate under cycling conditions or high temperature applications.

This product line is available in multiple configurations and is ideal for applications that require both heating and cooling mode (reverse polarity) or power generation. Assembled with proprietary solder construction, Bismuth Telluride semiconductor material and thermally conductive Aluminum Oxide ceramics, the ThermaTEC™ Series is designed for higher current and larger heat-pumping applications.

FEATURES

- Thermal Cycling Durability
- Power Cycling Reliability
- Precise Temperature Control
- Strong Lead Attachment
- RoHS Compliant
- Continuous Operation at High Temperatures

APPLICATIONS

- Analytical Instrumentation
- PCR Cyclers
- Thermal Test Sockets
- Electronic Enclosure Cooling
- Chillers (Liquid Cooling)
- Power Generation

PERFORMANCE SPECIFICATIONS		
Hot Side Temperature (°C)	25°C	50°C
Qmax (Watts)	29.2	32.1
Delta Tmax (°C)	63	74
Imax (Amps)	6.0	6.0
Vmax (Volts)	8.0	9.1
Module Resistance (Ohms)	1.22	1.38

SUFFIX	THICKNESS (PRIOR TO TINNING)	FLATNESS & PARALLELISM	HOT FACE	COLD FACE	Lead Length
TA	0.150″ +/- 0.001″	0.001″ / 0.001″	Lapped	Lapped	6.0″
TB	0.150″ +/- 0.0005″	0.0005″ / 0.0005″	Lapped	Lapped	6.0″

SEALING OPTION

SUFFIX	SEALANT	COLOR	TEMP RANGE	DESCRIPTION
R	RTV	White	-60 to 204 °C	Non-corrosive, silicone adhesive sealant
E	Epoxy	Black	-55 to 150 °C	Low density syntactic foam epoxy encapsulant

global solutions: local support™

Americas: +1 888.246.9050
Europe: +46.31.420530
Asia: +86.755.2714.1166

clv.customerpos@lairdtech.com
www.lairdtech.com

Laird TECHNOLOGIES

Innovative **Technology** for a **Connected** World

ThermaTEC™ Series HT6,7,F2,3030

Thermoelectric Modules

Performance Curves at Th = 25°C

THERMO

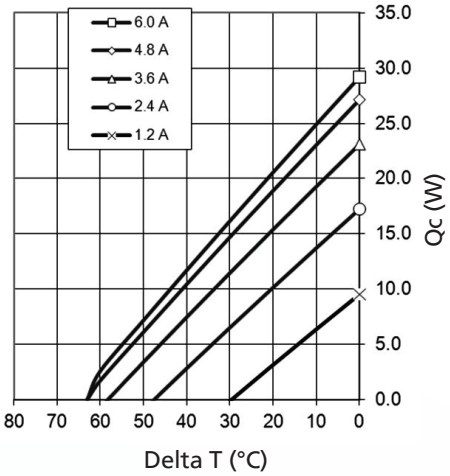

ELECTRIC

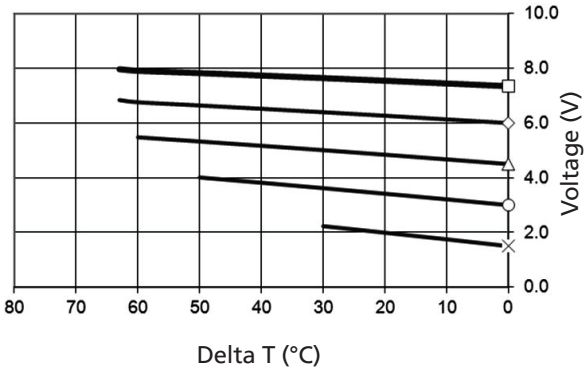

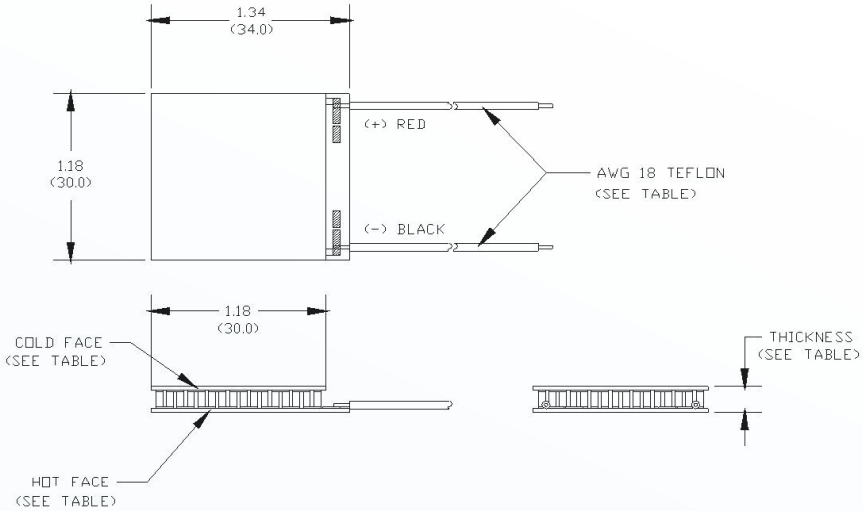

Ceramic Material: Alumina (Al_2O_3)
Solder Construction: 271°C, Proprietary

OPERATING TIPS

- Max Operating Temperature: 175°C
- Do not exceed Imax or Vmax when operating module
- Reference assembly guidelines for recommended installation

Any information furnished by Laird Technologies, Inc. and its agents is believed to be accurate and reliable. All specifications are subject to change without notice. Responsibility for the use and application of Laird Technologies materials rests with the end user, since Laird Technologies and its agents cannot be aware of all potential uses. Laird Technologies makes no warranties as to the fitness, merchantability or suitability of any Laird Technologies materials or products for any specific or general uses. Laird Technologies shall not be liable for incidental or consequential damages of any kind. All Laird Technologies products are sold pursuant to the Laird Technologies' Terms and Conditions of sale in effect from time to time, a copy of which will be furnished upon request.© Copyright 2010 Laird Technologies, Inc. All Rights Reserved. Laird, Laird Technologies, the Laird Technologies Logo, and other marks are trade marks or registered trade marks of Laird Technologies, Inc. or an affiliate company thereof. Other product or service names may be the property of third parties. Nothing herein provides a license under any Laird Technologies or any third party intellectual property rights.