EZURiO

Embedded Intelligent *Bluetooth*™ Serial Module

Part Number: BISMS02BI-01

1. General Description

Ezurio's Embedded Intelligent *Bluetooth* Serial Module is a fully integrated and qualified Class 1 *Bluetooth* solution designed for lowest cost of integration and ownership for designers wishing to include *Bluetooth* functionality in their products. The module is qualified to *Bluetooth* Version 2.0.

The Embedded Intelligent *Bluetooth* Serial Module is designed to give a rugged solution that is ideal for industrial automation and ruggedised handheld devices. It works over a wide temperature range of -40°C to +85°C. The physical form of the module allows designers to mount the antenna section of the module outside a screened enclosure.

The Embedded Intelligent Serial Module is based on Cambridge Silicon Radio's BlueCore4 chipset. The module contains all of the hardware and firmware for a complete *Bluetooth* solution, requiring no further components. The Module has an integrated, high performance antenna which is matched with the *Bluetooth* RF and baseband circuitry. The firmware integrated into the module implements the higher layer *Bluetooth* protocol stack, up to and including the Generic Access Profile (GAP), Service Discovery Profile (SDAP), Serial Port Profile (SPP) and Audio Gateway. A virtual processor is used within the BC04 to implement an AT command processor. This interfaces to the host system over a straight forward serial port using an extensive range of AT commands. The AT command set abstracts the *Bluetooth* protocol from the host application, saving many months of programming and integration time. It provides extremely short integration times for data oriented cable replacement and voice applications. A low cost development system and integrated RS232 products with the same firmware are available for fast product evaluation and development.

An alternative version of firmware is available that provides support for multi-point applications.

The Module can be configured so that it can be attached to a 'dumb' terminal or attached to a PC or PDA for cable replacement applications.

In addition to the *Bluetooth* functionality, The Embedded Intelligent Serial Module provides access to 6 General I/O lines and one ADC input. These can be configured to extend the UART control or to provide connection to simple devices such as switches or LEDs without requiring any external processing. The GPIO lines can be accessed either via the wired host UART connection, or remotely over the *Bluetooth* link. Support is also provided for a PCM connection to an external audio codec.

The Embedded Intelligent *Bluetooth* Module is supplied in a small form factor PCB (17.7mm x 46.0mm x 5.0mm), that solders directly. The module includes a high sensitivity, high gain antenna which provides excellent range. Typical open field performance provides ranges of over 250 metres at transmit powers of 4mW.

Support is provided for low power modes that make the Embedded Intelligent *Bluetooth* Module particularly applicable to battery powered installations.

The Embedded Intelligent *Bluetooth* Module is Lead-free and RoHS compliant and supports an industrial operating temperature range of -40°C to +85°C.

1.1 Applications

- POS Equipment
- Industrial Automation
- Vending Equipment
- Automotive Applications
- Telematics
- Medical

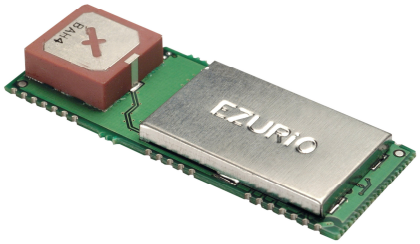

Bluetooth is a trademark owned by *Bluetooth* SIG, Inc., USA, and is licensed to Ezurio Ltd

2. Features

Feature	Implementation
Bluetooth Transmission	Class 1
Fully *Bluetooth* pre-qualified	*Bluetooth* 2.0
Range	250 metres typical (free space)
Frequency	2.400 – 2.485 GHz
Max Transmit Power	+6dBm
Min Transmit Power	-27dBm
Receive Sensitivity	Better than -86dB
Data Transfer rate	Up to 300Kbps over UART.
Serial Interface	RS-232 bi-directional for commands and data using AT commands
Serial parameters	Default 9600,n,8,1 - Configurable from 1,200bps to 961,200 bps.
	7 bit firmware is available – please contact Ezurio
	Support for DTR, DSR, DCD, RI, RTS, CTS
Physical size	17.7mm x 46.0mm x 5.0mm, 8g
Current consumption	Less than 36mA during data transfer in standard power mode. Lower powers are attainable with a configurable low power mode.
Low power sniff mode	2.5mA typ
Temperature Range	Normal operation: -40°C to +85°C
Supply Voltage	3.3V – 7.0V
Interface Levels	3.0V Logic
Audio	Audio can be transferred over SCO channels through the PCM interface at 64kbps. PCM can be configured as master or slave.
	Support for dual slave PCM connections.
Profiles	Server - SPP (Full), DUN, Audio Gateway, Headset, Handsfree
	Client - All RFCOMM based profiles
Multipoint	Max 7 slaves with multipoint
Field upgradeable	Over UART
Protocols	Single point firmware is controlled and configured using AT Commands. Standard multipoint firmware uses a simple packet based protocol and requires a host to enable the module to function effectively.
	Single point only allows a point to point connection whereas multipoint allows more than one simultaneous connection.
GPIO	6 x digital (DTR can also be allocated as GPIO)
ADC	1 x 8 bit
Indicators	Pads for 2 programmable LEDs
Lead free	Lead-free and RoHS compliant

EZURiO

3. Functional Block Diagram

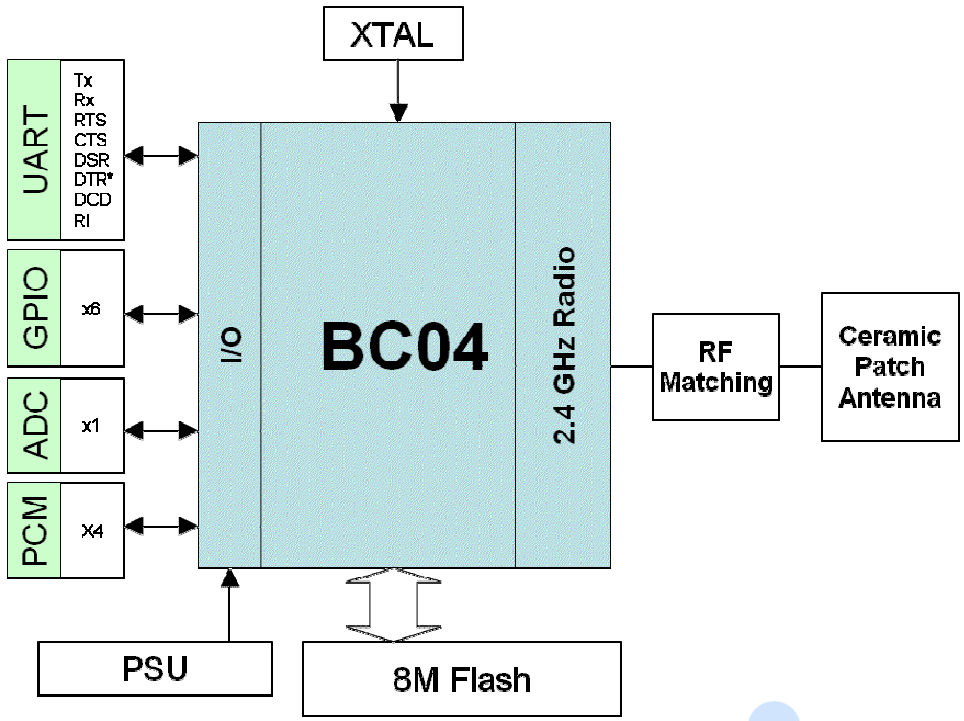

* DTR can be configured as a seventh GPIO

EZURiO

3.1 Connection Diagram

The Module is connected to a "mother" PCB by direct soldering to edge pads. With the exception of pads 36 – 38, pads adjacent to the antenna do not provide an electrical connection, but are used for additional mechanical stability.

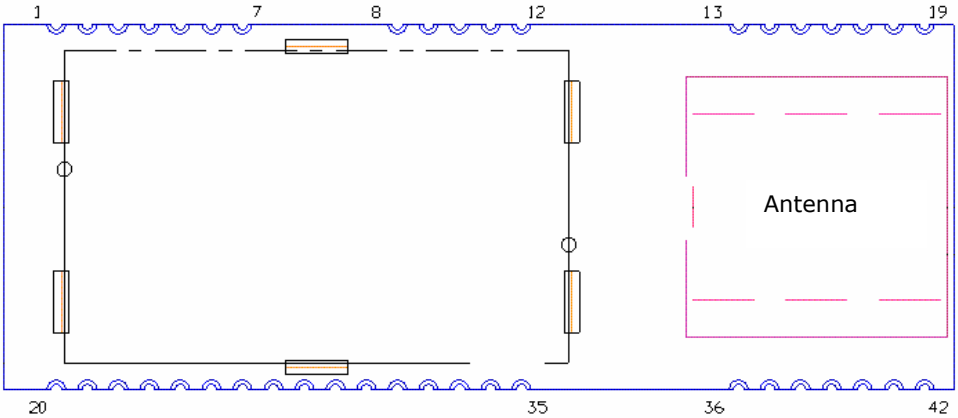

3.2 Pin Descriptions

The table below defines the pin functions. Refer to the previous section for the pin location

Pin No.	Signal	Description
1	VCC	
3	USB /RESERVED	Do not connect
5	RESET-	Reset I/P *
7	GPIO_7	I/O for Host
20	GND	
22	UART_RI	I/O for Host
24	UART_RX	Receive Data I/P
26	UART_TX	Transmit Data O/P
28	UART_DSR	Input
30	PCM_SYNC	PCM Sync I/P
32	PCM_CLK	PCM Clock I/P
34	GPIO_9 PCM_SLVCLK	I/O for Host (Slave PCM Clock)
36	GPIO_4	I/O for Host (LED1)
38	GPIO_8	I/O for Host

Pin No.	Signal	Description
2	USB /RESERVED	Do not connect
4	GND	
6	GPIO_6	I/O for Host
8-19	N/C	Do not Connect
21	UART_DCD	I/O for Host
23	UART_RTS	Request to Send O/P
25	UART_CTS	Clear to Send I/P
27	UART_DTR (GPIO_3)	I/O for Host
29	GND	
31	PCM_IN	PCM Data I/P
33	PCM_OUT	PCM Data O/P
35	GPIO_5	I/O for Host (LED2)
37	Analogue_0	ADC
39-42	N/C	Do not connect

Notes:

* The reset line has a fixed 10kOhm pull up resistor with the reset being active low.

PIO lines can be configured through software to be either inputs or outputs with weak or strong pull-ups or pull-downs. At reset, all PIO lines are configured as inputs with weak pull-downs.

UART_RX, UART_TX, UART_CTS, UART_RTS, UART_RI, UART_DCD and UART_DSR are all 3.0v level logic. For example, when RX and TX are idle they will be sitting at 3.0V. Conversely for handshaking pins CTS, RTS, RI, DCD, DSR a 0v is treated as an assertion.

Pin 22 (UART_RI) is active low. It is normally 3.0v. When a remote device initiates a connection, this pin goes low. This means that when this pin is converted to RS232 voltage levels it will have the correct voltage level for assertion.

Pin 21 (UART_DCD) is active low. It is normally 3.0v. When a connection is live this pin is low. This means that when this pin is converted to RS232 voltage levels it will have the correct voltage level for assertion.

Pin 28 (UART_DSR) is an input, with active low logic. It should be connected to the DTR output of the host. When the Module is in high speed mode (See definition for S Register 507), this pin should be asserted by the host to ensure that the connection is maintained. A deassertion is taken to mean that the connection should be dropped, or an online command mode is being requested.

The GPIO pins can be accessed using S Registers in the range 623 to 629. GPIO4 and 5 are connected to unpopulated LED pads on the module. If these I/O pins are set for input, then the LED will be driven by the host and appropriate drive current requirements must be satisfied. A Logic 1 switches on the LED.

GPIO3 is shares the pin with DTR output (active low). See S Register 552 & 553.

Analogue 0 input should not exceed 1.8v. S Register 701 is used to access it.

3.3 Electrical Specifications

3.3.1 Absolute Maximum ratings

Absolute maximum ratings for supply voltage and voltages on digital and analogue pins of the Module are listed below; exceeding these values will cause permanent damage.

Parameter	Min	Max	Unit
Peak current of power supply	0	100	mA
Voltage at digital pins	-0.3	3.3	V
Voltage at POWER pin	3.3	7	V

3.3.2 Recommended Operating Parameters

3.3.2.1 Power Supply

Signal Name	Pin No	I/O	Voltage level	Comments
Vcc	1	I	3.3V to 7.0V	I_{typ} = 30mA
GND	4, 20, 29			

The module contains a power on reset circuit that ensures the module is reset at power on. The internal reset circuit is triggered when the input voltage to the module drops below ~1.7V and is hence only suitable for providing a power on reset signal. If the supply voltage to the module can drop below the minimum voltage level in normal operation, then it is recommended that an external brownout circuit is provided to assert the module reset and to ensure that the module is reset when the module supply voltage drops below 3.1V.

This will ensure that the module will return to an operational state when the supply voltage comes back within specification. For example, if the module supply can drop to 2.7V and then be restored to 3.3V there is no guarantee that the module will still be operational unless the reset signal has been asserted.

EZURIO

3.3.2.2 RS-232 Interface

Signal Name	Pin No	I/O	Signal level	Comments
UART_TX	26	O	V_{OL}max=0.2V V_{OH}min=2.8V	
UART_RX	24	I	V_{IL}max=0.8V V_{IH}min=2.1V V_{IH}max=3.4V	
UART_CTS	25	I	V_{IL}max=0.8V V_{IH}min=2.1V V_{IH}max=3.4V	
UART_RTS	23	O	V_{OL}max=0.2V V_{OH}min=2.8V	
UART_DSR	28	I	V_{IL}max=0.8V V_{IH}min=2.1V V_{IH}max=3.4V	
UART_DTR	27	O	V_{OL}max=0.2V V_{OH}min=2.8V	Shared with GPIO_3
UART_RI	22	I or O	O/P : V_{OL}max=0.2V V_{OH}min=2.8V I/P : V_{IL}max=0.8V V_{IH}min=2.1V	Direction may be programmed.

			V_{IH}max=3.4V	
UART_DCD	21	I or O	O/P : V_{OL}max=0.2V V_{OH}min=2.8V I/P : V_{IL}max=0.8V V_{IH}min=2.1V V_{IH}max=3.4V	Direction may be programmed.

UART_RX, UART_TX, UART_CTS, UART_RTS, UART_RI, UART_DCD and UART_DSR are all 3.0v level logic. For example, when RX and TX are idle they will be sitting at a nominal 3.0V. Conversely for handshaking pins CTS, RTS, RI, DCD, DSR a 0v is treated as an assertion.

3.3.2.3 General Purpose I/O and ADC

Signal Name	Pin No	I/O	Signal level	Comments
GPIO 4, 5, 6, 7, 8, 9	36, 35, 6, 7, 38, 34	I or O	O/P : V_{OL}max=0.2V V_{OH}min=2.8V I/P : V_{IL}max=0.8V V_{IH}min=2.1V V_{IH}max=3.4V	GPIO_4 and 5 are shared with the onboard LED pads. GPIO_9 is also used for PCM_SLVCLK.
GPIO 3	27	I or O	O/P : V_{OL}max=0.2V V_{OH}min=2.8V I/P : V_{IL}max=0.8V V_{IH}min=2.1V V_{IH}max=3.4V	Shared with DTR
ADC 0	37	I	Range 0 – 1.8V	ADC

PIO lines can be configured through software to be either inputs or outputs with weak or strong pull-ups or pull-downs. At reset, all PIO lines are configured as inputs with weak pull-downs.

3.3.2.4 PCM Interface

Signal Name	Pin No	I/O	Signal level	Comments
PCM_CLK	32	I or O	O/P : V_{OL}max=0.2V V_{OH}min=2.8V I/P : V_{IL}max=0.8V V_{IH}min=2.1V V_{IH}max=3.4V	If unused keep pins open
PCM_IN	31	I	V_{IL}max=0.8V V_{IH}min=2.1V V_{IH}max=3.4V	
PCM_SYNC	30	I or O	O/P : V_{OL}max=0.2V V_{OH}min=2.8V I/P : V_{IL}max=0.8V V_{IH}min=2.1V V_{IH}max=3.4V	
PCM_OUT	33	O	V_{OL}max=0.2V V_{OH}min=2.8V	
PCM_SLV_CLK		O	O/P : V_{OL}max=0.2V	Available as a clock when two connected devices are both in PCM

EZURiO

(GPIO9)			V_{OH}min=2.8V	slave mode. Shared with GPIO_9

3.3.2.5 Miscellaneous

Function	Signal Name	Pin No	I/O	Signal level	Comments
Reserved	USB D-	3	I	V_{IL}max =0.3vdd_usb V_{IH}min =0.7vdd_usb	Normally inactive. Pull to GND through 10K
Reserved	USB D+	2	I	V_{IL}max =0.3vdd_usb V_{IH}min =0.7vdd_usb	Normally inactive. Pull to GND through 10K
Reset	RESET	5	I	Threshold 2.6V	Active LOW

Terminology:

USB Signal Levels. vdd_usb refers to the internal voltage generated by the LDO regulator on the module, which is typically 3.1V. Hence 0.3vdd_usb and 0.7vdd_usb correspond to 0.9 V to 2.1V. If Vcc falls below the recommended minimum of 3.3V, USB operation cannot be guaranteed.

The USB lines cannot be accessed when using AT firmware.

4. I/O Characteristics

4.1 Power Consumption

The current drain from the Vcc power input line is dependent on various factors. The three most significant factors are the voltage level at Vcc, UART Baudrate and the operating mode.

The hardware specification for the Module allows for a voltage range of 3.3 to 7.0 at Vcc. Tests have shown that where power drain is an issue, it is best to keep Vcc at the lower end of the range.

The UART Baudrate has a bearing on power drain because as is normal for digital electronics, the power requirements increase linearly with increasing clocking frequencies. Hence higher baudrates result in a higher current drain.

Finally with regards to operating mode the significant modes are; idle, waiting for a connection, inquiring, initiating a connection, sniff and connected. With connected mode, it is also relevant to differentiate between no data being transferred and when data is being transferred at the maximum rate possible. The AT command Set document describes how to configure the Module for optimal power performance.

5. DC Characteristics

5.1 RF Performance

5.1.1 Transmit Power

Conducted Transmit Power	min: 1.0mW (0dBm)	max: 4mW (6dBm)
Effective Transmit Power	min:0dBm	Max: +6dBm

Output power can be reduced by program control

5.1.2 Receive Sensitivity

Receive Sensitivity	-86dBm (at 25°C)
Antenna Gain	+2dBi typ
Effective Receive Sensitivity	-88dBm (at 25°C)

5.2 Range

Range is determined by the environment and the orientation of the module.

The data throughput of the Module is limited to 300Kbps by the parsing of the data being transferred through the RFCOMM stack.

6. Functional Description

The Embedded Intelligent *Bluetooth* module is a self-contained *Bluetooth* product and requires only power to implement full *Bluetooth* communication. The integrated, high performance antenna together with the RF and Base-band circuitry provides the *Bluetooth* wireless link and the UART interface provides a connection to the host system.

The variety of interfaces and the AT command set allow the Embedded Intelligent *Bluetooth* Module to be used for a wide number of short range wireless applications, from simple cable replacement to complex multipoint applications, where multiple radio links are active at the same time.

The complexity and flexibility of configuration are made simple for the design engineer by the integration of an extremely comprehensive set of AT commands, supplemented with a range of "S" registers which are used for non-volatile storage of system parameters. These are fully documented in the "Blu2i AT Command Reference Manual".

6.1 Interfaces

6.1.1 UART interface

UART_TX, UART_RX, UART_RTS and UART_CTS form a conventional asynchronous serial data port with handshaking. The interface is designed to operate correctly when connected to other UART devices such as the 16550A. The signalling levels are nominal 0V and 3.0V and are inverted with respect to the signalling on an RS232 cable. The interface is programmable over a variety of baud rates; no, even or odd parity. The default condition on power-up is pre-assigned in the external Flash. Two-way hardware flow control is implemented by UART_RTS and UART_CTS. UART_RTS is an output and is active low. UART_CTS is an input and is active low. These signals operate according to normal industry convention.

By writing different values to the relevant S register the UART_RI can be continuously polled to detect incoming communication. The UART_RI signal serves to indicate incoming calls.

UART_DSR is an active low input. It should be connected to DTR output of the host. When the module is running in high speed mode (See definition for S Reg 507), this pin should be asserted by the host to ensure connection is maintained. A de-assertion is taken to mean that the connection should be dropped, or an online command mode is being requested.

The module communicates with the customer application using the following signals:

RS-232

Port /TXD @ application sends data to the module's UART_RX signal line

Port /RXD @ application receives data from the module's UART_TX signal line

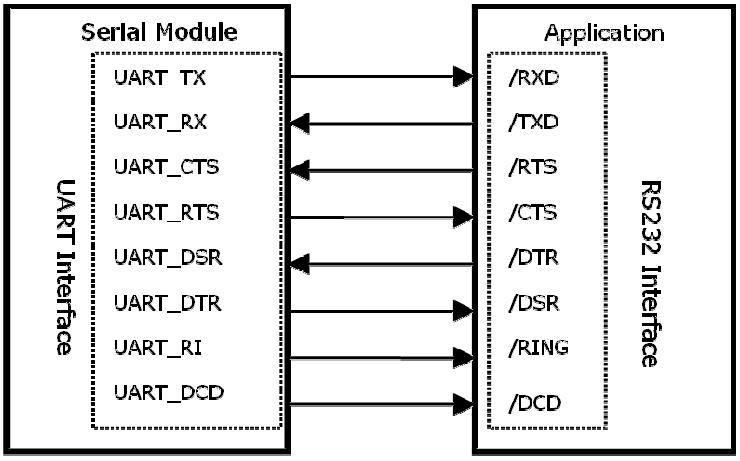

Figure 6.1 : UART interfaces

Note that the serial module output is at 3.0V CMOS logic levels. Level conversion must be added to interface with an RS-232 level compliant interface.

6.1.2 GPIO Port

Eight lines of programmable bi-directional input/outputs (I/O) are provided that can be accessed either via the UART port, or Over The Air (OTA) from a second *Bluetooth* unit. These can be used as data inputs or to control external equipment. By using these in OTA mode, an embedded *Bluetooth* Serial module can be used for control and data acquisition without the need for any additional host processor. A further line can be used as an input.

Each of the GPIO ports can be independently configured to be either an Input or Output. A selection of ports can be accessed synchronously.

The ports are powered from V_{CC}. The mode of these lines can be configured and the lines are accessed via S Registers in the range 623 to 629.

Low latency I/O can be accessed by using Ezurio's I/O via an enhanced inquiry process.

6.1.3 PCM CODEC Interface

PCM_OUT, PCM_IN, PCM_CLK and PCM_SYNC carry up to three bi-directional channels of voice data, each at 8ksamples/s. The format of the PCM samples can be 8-bit A-law, 8-bit μ-law, 13-bit linear or 16-bit linear. The PCM_CLK and PCM_SYNC terminals can be configured as inputs or outputs, depending on whether the module is the Master or Slave of the PCM interface.

In applications where the PCM master cannot supply a clock signal, the module can be configured to generate a clock signal on this GPIO: PCM_SLVCLK. Please contact an Ezurio FAE for further details.

The Module is compatible with the Motorola SSI TM interface and interfaces directly to PCM audio devices including the following:

6.1.3.1 Compatible Codec Chips

PCM_OUT, PCM_IN, PCM_CLK and PCM_SYNC carry up to three bi-directional channels of voice data, each at 8ksamples/s. The format of the PCM samples can be 8-bit A-law, 8-bit μ-law, 13-bit linear or 16-bit linear. The PCM_CLK and PCM_SYNC terminals can be configured as inputs or outputs, depending on whether the module is the Master or Slave of the PCM interface. Please contact an Ezurio FAE for further details.

The Module is compatible with the Motorola SSI TM interface and interfaces directly to PCM audio devices including the following:

- Winbond W61360 13-bit linear CODEC (Motorola MC145483 compatible)

- OKI MSM7702 single channel A-law and μ-law CODEC
- OKI MSM7705 four channel A-law and μ-law CODEC

The default codec support is for the Winbond W61360

Codec development boards that mate with the EZURiO Wireless Developers Kit are available for each of the three codecs listed above.

6.1.4 ADC

The module provides access to one 8-bit ADC. This provides an input range of 0mV to 1,800mV, which can be read using S register 701.

Suitable external scaling and over-voltage protection should be incorporated in your design. The module provides 5 samples per second at the UART with a baud rate of 115,200 or above.

Low latency access of the upper 6 bits of the ADCs can be obtained by using Ezurio's I/O via an enhanced inquiry process.

6.1.5 LEDs

Pads are provided to allow two LEDs to be added for diagnostic purposes. They are controlled by an S registers 624 and 625 to display the status of various parameters and are useful for debug and test.

7. Integrated Firmware

7.1 General

The Embedded Intelligent Serial Module has been designed to provide the fastest route to market for designers who wish to use *Bluetooth* to wirelessly enable their products. To achieve this Ezurio has implemented a wide ranging set of AT commands that control all of the standard *Bluetooth* tasks. These remove the complexity of *Bluetooth* from the design engineer and allow the wireless link to be controlled by means of a simple set of commands.

For applications where multiple concurrent live connections need to be maintained a variant of firmware is available which is specifically targeted at multipoint operation.

For both applications a comprehensive range of windows based software is available to speed up the design process. A low cost development kit is also available that can be used for prototyping both cable replacement and multipoint applications.

7.2 Profiles

Bluetooth has been designed to accommodate a very wide range of wireless applications. To enable these different applications the *Bluetooth* SIG (Special Interest Group) has defined a series of different profiles that define the way in which *Bluetooth* devices communicate with each other and perform basic functions. These provide a base line of interoperability for specific application scenarios, upon which more complex user applications can be developed.

There are over 30 different profiles, many of which have been developed for specific applications. The Embedded Intelligent Serial Module firmware is provided with support for the profiles that are most commonly required for cable replacement applications.

The current profiles support includes:

GAP	Generic Access Profile	The base connection profile upon which others are based.
SDP	Service Discovery Profile	The profile to find other *Bluetooth* devices and the services they support.
SPP		Emulation of a serial cable for cable replacement applications.
DUN	Dial Up Networking	Profile support for connection to an external PSTN, GSM, GPRS or VPN connection.
AG	Audio Gateway	The base element for Headset and Handsfree profile. A portion of these profiles must be implemented within the host system.

HSP	Headset Profile	Supports early implementations of headsets. Now largely replaced by the:
HFP	Hands-free profile	which provides more control over the headset operation.
FTP	File Transfer Profile	(full client support).

For other profile support, please contact EZURiO at blu2i@ezurio.com

7.3 AT Overview

The AT command set is well known by engineers and was developed to aid the integration of PSTN modems. It provides simple high level commands for complex functions that can easily be incorporated into programs or used within programming scripts.

Ezurio has used this familiar concept and extended it to *Bluetooth* to simplify the integration of *Bluetooth* for product designers. Rather than having to understand the many stages of setting up a *Bluetooth* connection or function, a single AT command is all that is required.

For example to connect to a *Bluetooth* device with an address 00809844EA13, all that is needed is to send the string

ATD00809844EA13

to the UART of the Embedded Intelligent *Bluetooth* Module. The module will attempt to make a connection and return (connect 00809844ea13,1101) or (NO CARRIER), depending on whether the connection was successful.

The scope of the AT command set developed by Ezurio is such that most *Bluetooth* functionality can be covered, greatly reducing development time.

To provide additional functionality a range of "S" registers has been implemented. These allow program settings to be stored to control the Embedded Intelligent Serial Module function and also give access to configuring and reading ports and status registers within the Embedded Intelligent Serial Module.

Full details of the AT command set are provided in the Blu2i AT Command Reference Manual.

EZURiO

7.3.1 AT features at a glance

7.3.1.1 General

- Configure two modules to automatically connect and transfer data, audio or a combination of data and audio when both devices are powered. The peer device does not have to be another Intelligent Serial Module. It is possible to implement auto connect with a *Bluetooth* enabled mobile phone.
- Automatically re-connect devices when a connection is dropped.
- Remotely access the AT parser of the remote unit from a master device to perform Over The Air (OTA) configuration.
- Configure the module to enter a state on power up and after a period of time change to another state automatically. This allows units to be placed in the discoverable state for a limited time period.
- Read and write to GPIO lines
- Read the ADC channel
- Get fast GPIO and ADC status through an inquiry response (patent pending)

7.3.1.2 UART

- Change the baud rate from 1200 to 921,600 baud.
- Use the DSR line to drop connections
- Flexible configuration as either DTE or DCE
- Change escape sequence character
- Change the Parity
- Enable or disable echoes

7.3.1.3 Security

- Enable Authentication by requiring a PIN code for incoming AND / OR outgoing connections
- Enable data to be encrypted over the air for incoming AND / OR outgoing connections. The module can be configured to be:

  non-connectable and non-discoverable,
  non-connectable but discoverable,
  connectable but non-discoverable,
  connectable and discoverable.
- Automatically store Paired devices in a trusted device database in the flash memory

7.3.1.4 *Bluetooth*

- Set the module to be a master or slave
- Make a *Bluetooth* connection to a specified device
- Perform a full inquiry for other *Bluetooth* devices
- Query a remote device to check if a service is offered
- Fetch the friendly name of a remote device
- Increase or decrease the delay before the master abandons a connection attempt
- Change the device class code
- Set the device's friendly name
- Change the Inquiry scan time
- Change number of returned devices from an inquiry scan
- Obtain the RSSI value for a connection

7.3.1.5 Power Management

- Decrease or increase the output power to suit your connection range
- Configure the modules to work in Sniff and other low power modes.

EZURiO

7.4 Multipoint Firmware

For multipoint operation, the appropriate firmware can be enabled. Whereas the firmware for single point 'AT' communication only allows one connection to be active at any one time, using multipoint firmware allows a number of simultaneous connections to be made and maintained. It also allows connections to multiple profiles to one or more devices. Multipoint firmware should be seen as a concept of channels instead of slave connections.

When operating in *Bluetooth* multipoint mode, the resources and bandwidth of a *Bluetooth* master device are shared amongst the different connected devices. This has an impact on the maximum throughput to any one device. If multiple device connections are maintained it also impacts on the memory resources and device database within the *Bluetooth* stack. Designers should be aware of these restrictions when using multipoint configurations. In most cases better latency and power consumption can be achieved by polling or fast data transfer rather than by maintaining concurrent connections.

In general, multipoint connections are viable for up to three connections, but other connection schemes become appropriate if a greater number of devices are being deployed.

7.5 OTA (Over the Air) Configuration

When the Embedded Intelligent Serial Module has its remote AT parser enabled, its settings can be remotely controlled by a master unit (see register S536). This places the slave unit's AT parser in remote mode providing over the air configuration. This mode is of use for remote sensor applications, where no host processor is required to control the slave *Bluetooth* unit.

7.6 Boot modes

The module has the capability of booting into 1 of 4 modes. Currently only Boot Modes 1 and 3 are supported.

Boot Mode 1 is default and gives functionality equivalent to the BISM1 and BISM2 module.

Boot Mode 3 changes the PCM configuration for use with OKI codecs.

These modes will be used to specify alternative PSKEY settings to allow for different basic operation. Please contact Ezurio for further information.

EZURiO

8. Low Power Modes

The current drain from the Vcc power input line is dependent on various factors. The three most significant factors are the voltage level at Vcc, UART baud rate and the operating mode.

The hardware specification for the Embedded Intelligent *Bluetooth* Module allows for a voltage range of 3.3 to 7.0v at Vcc. Tests have shown that there is no significant difference in current draw when Vcc is 5 or 6V.

The UART baud rate has a bearing on power drain because as is normal for digital electronics, the power requirements increase linearly with increasing clocking frequencies. Hence higher baud rates result in a higher current drain.

Finally with regards to operating mode the significant modes are; idle, waiting for a connection, inquiring, initiating a connection and connected. With connected mode, it is also relevant to differentiate between no data being transferred and when data is being transferred at the maximum rate possible.

The operating mode can best be described by stating the AT commands required to enter that mode. In addition, there are certain S Registers which have a direct impact on power consumption, which are described next.

The Embedded Intelligent *Bluetooth* Module has provision for an LED which can be configured to display connection status. Tests have shown that this LED can consume up to 5.3mA which is more than double the current draw when in Idle mode. S Register 534 can be used to completely disable this indicator.

S Registers 508 to 511, which specify the page and inquiry scan intervals and windows, can be used to adjust the average current drain when in discoverable and or connectable modes. Registers 508 and 509 specify the interval and window for page scans and registers 510 and 511 specify the interval and window for inquiry scans. Register pairs 508/509 and 510/511 describe duty cycles when the module goes into scan modes. It is while scanning that the highest current draw occurs. The average current draw is determined by simple arithmetic using the values stored in the 508/509 and 510/511 register pairs.

The current drain while waiting for a connection or discoverable mode is about 30 times higher than in idle mode. This is when the page/inquiry scan duty cycle is 100%. These modes give the quickest response to a page or inquiry request from a remote peer.

It is possible to reduce the duty cycle down to as low as 0.5% at the expense of response time. The response time can be specified via S Registers 508 and 510 for page and inquiry respectively, where the worst case response time can be as high as 2.5 seconds. Then the duty cycle can be varied by changing the value of S Registers 509 and 511 appropriately.

For example, if S Register 508 and 510 are both set to 1000ms and S Register 509 and 511 are both set to 11ms then the duty cycle is reduced to 1%, this means that average current drain at 5.0v will be 2% of 65mA plus the normal idle mode current, that is, it is as low as 2.75mA. However, in this case, it can take up to 1 second to establish a connection.

The connected state current consumption while a master or slave can be considerably reduced by enabling Sniff mode, described in detail in the next section.

		mA
Current per LED (when fitted)	3.3V	3.20
	5.0V	5.30

8.1 Low Power Modes using Sniff

Bluetooth connections are master/slave in nature. A master sends packets and a slave has to acknowledge that packet in the next timeslot. Timeslots in *Bluetooth* are 625 microseconds wide. This implies that a master will always know when packets will be sent and received, which further means it is able to optimise power usage by switching on power hungry circuitry only when needed.

A slave on the other hand does NOT have prior knowledge of when a packet will be received and has to assume that a packet will be received from a master on every receive slot. This means that it has to leave its receiving circuitry on for most of the receive slot duration. The result of this is high power consumption, where a slave with no data transmission still consumes around 31mA whereas a master consumes only 6mA.

This problem was identified very early in the evolution of *Bluetooth* (especially since headsets spend all their time as a slave in a *Bluetooth* connection) and it was solved by having a mode called Sniff, with appropriate lower layer negotiating protocol.

Sniff mode during connection is basically an agreement between the slave and its master that data packets will only be exchanged for N timeslots every M slots. The slave can then assume that it will never be contacted during

N-M slots, and so can switch its power hungry circuitry off. The specification goes further by also specifying a third parameter called 'timeout' (T) which specifies 'extra' timeslots that the slave will agree to listen for after receiving a valid data packet. Put another way, if a data packet is received by the slave, then it knows that it MUST carry on listening for at least T more slots. If within that T slot time period another data packet is received, then the timer is restarted. This mechanism ensures low power consumption when there is no data transfer – at the expense of latency. When there is a lot of data to be transferred, it acts as if sniff mode were not enabled.

It is stated above that during sniff mode, a slave listens for N slots every M slots. The *Bluetooth* specification states that a master can have up to 7 slaves attached to it with all slaves having requested varying sniff parameters. It may therefore be impossible to guarantee that each slave gets the M parameter it requested. In light of this, the protocol for enabling sniff mode specifies that a requesting peer specify the M parameter as a minimum and maximum value. This will allow the master to interleave the sniff modes for all slaves attached. This is illustrated in the diagram below.

For this reason, the sniff parameters are specified in the Embedded Intelligent *Bluetooth* Module via four S registers. S Register 561 is used to specify 'N', S Register 562 is used to specify 'T' and S Registers 563/564 are used to specify minimum 'M' and maximum 'M' respectively. Although the specification defines these parameters in terms of timeslots, the S register values have to be specified in units of milliseconds and the firmware does the necessary translation to timeslots.

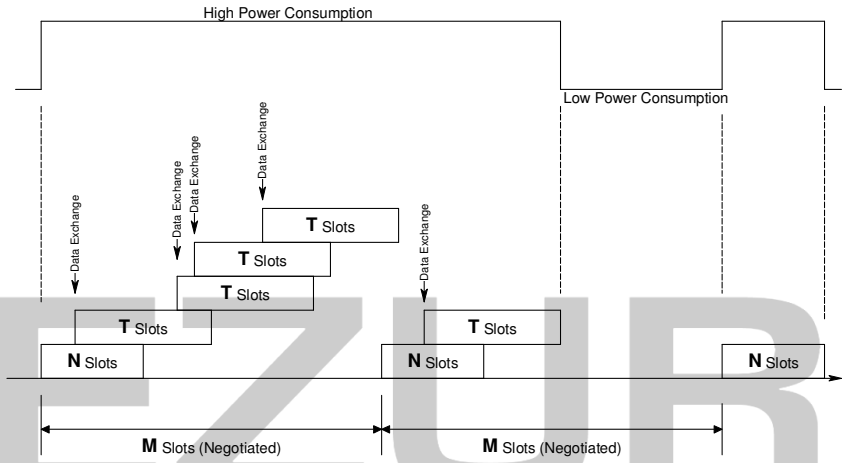

9. Application Examples

9.1 RS232 Modem Signals

Just as a telephony modem has control and status lines, the module also provides for 6 control and status lines as per the table below. The direction column is as seen from the module's viewpoint.

Direction	Function
IN or OUT *	CI also known as RI (Ring Indicate)
IN or OUT *	DCD (Data Carrier Detect)
IN	DSR (Data Set ready)
OUT	DTR (Data Terminal Ready)
IN	CTS (Clear to Send)
OUT	RTS (Request to Send)
* configurable with S register 552	

Pin	Direction	Connector Pin Label	Function
27	IN/OUT	GPIO_3/UART_DTR	General Purpose I/O (or DTR functionality)
36	IN/OUT	GPIO_4/LED1	General Purpose I/O (LED1)
35	IN/OUT	GPIO_5/LED2	General Purpose I/O (LED2)
6	IN/OUT	GPIO_6	General Purpose I/O
7	IN/OUT	GPIO_7	General Purpose I/O
38	IN/OUT	GPIO_8	General Purpose I/O
34	IN/OUT	GPIO_9/PCM_SLVCLK	General Purpose I/O (PCM SLAVE CLK)

Notes:

1. UART_DSR is used by the module to sense that the host is connected, and is intricately linked with connections. For outgoing calls, if this line is not asserted then an error is indicated. Similarly for AT+BTP and AT+BTG.

While in a call, for appropriate modes, a de-assertion means fall into command state. If the de-assertion exists for longer than the period specified in S Register 519 then the connection is dropped as if an ATH command was received.

2. UART_RI, is normally de-asserted. When an incoming connection is detected it will be asserted, until the connection is either answered or rejected using ATA and ATH respectively. See S Registers 552 & 553 for more details

3. UART_DCD will be de-asserted when the device is in the unconnected state. Asserted when a connection is active. See S Registers 552 and 553 for more details.

4. GPIO_3 is either used as GPIO or driven as UART_DTR. When the unit is configured in pure host mode, this pin is forced into UART_DTR and is asserted when there is a *Bluetooth* connection.

5. GPIO_9 can be used to generate a PCM clock when both connected modules are in slave mode. Contact Ezurio for more information.

The GPIO Pins are available for general purpose use.

EZURiO

9.2 Modem signalling over *Bluetooth*

The RFCOMM protocol used in *Bluetooth* for implementing the serial port profile allows for the exchange of four modem signals. This information is contained in a special transparent message which contains bits identified as RTR, RTC, DV and IC which depending on the type of serial device being emulated maps to DTR or DSR, RTS, DCD and RI respectively. In addition, this message also includes the ability to convey a BREAK input from one end to the other.

To allow for the greatest flexibility and variability in how the modem control signals are used in the real world, S Registers 551, 552 and 553 have been provided which allow for any of RTR, RTC, DV and IC to be mapped to any modem control/status line.

BREAK signal on RX line

If the host sends a break signal of duration greater than 100ms, then the module is configured to treat that as a signal to perform a hardware reset.

This being the case it is not possible to convey a BREAK over *Bluetooth* to the peer device.

A continuous low on the RX line will be treated by the module as a reset (BREAK). Therefore the host should keep RX high while idling.

Reset

The module can be reset by the host without the need of any I/O using a BREAK signal. The module has been configured to reset when the RX line detects a break condition for durations greater than 100 milliseconds.

The Reset line has a fixed pull up resistor of 10k Ohm

9.3 Pure Cable Replacement Mode

The module has the capability of being preset into a pure 5-wire data cable replacement mode. The 5 wires being RX, TX, CTS, RTS and GND. This mode requires no changes to a host application since the *Bluetooth* connection is automatically set up on power up. If the connection is lost the Embedded Intelligent *Bluetooth* Module will constantly retry until the connection is reinstated.

By implication, two devices are needed to replace a cable. One device is pre-configured to always be a master and the other, a slave.

Assuming the *Bluetooth* address of the master to be <bdaddr_m> and that of the slave to be <bdaddr_s>, the master module is configured by sending it the following AT commands:

```
AT&F*
ATS512=1
ATS504=1
ATS507=2
ATS530=2000
AT&W
AT+BTR<bdaddr_s>
```

The ATS507=2 setting puts the device in DSR drop mode only. This means that when the device needs to be reconfigured, deasserting the DSR line will ensure that the module responds quickly to AT commands. This further means that in stand alone mode, the DSR input line MUST be asserted e.g. 0V in TTL signal mode.

The slave is configured by:

```
AT&F*
ATS512=4
ATS0=-1
AT&W
AT+BTM<bdaddr_m>
```

EZURiO

Where AT+BTM<bdaddr_m> is optional. If it is not specified, then the slave unit will accept connections from any device. If specified then only connections from the device specified will be accepted.

If it is desired that the slave unit should not be discoverable (the master is by default not discoverable), then the configuration commands are:

```
AT&F*
ATS512=3
ATS0=-1
AT&W
AT+BTM<bdaddr_m>
```

Where AT+BTM<bdaddr_m> is optional. If it is not specified, then the slave unit will accept connections from any device. If specified then only connections from the device specified will be accepted.

When the units are next power cycled, the slave unit will wait for the master to connect to it and the master will continually look for the slave. If a connection attempt fails, the master will wait for 2 seconds before reattempting a connection. This 2 second delay can be varied by issuing it an ATS530 command with an appropriate value in the range 100ms to 15000ms.

IMPORTANT NOTE: The DSR input to the module MUST be asserted for the auto connection to succeed. When operating at TTL levels a 0V is seen as an assert state. When operating at RS232 levels and voltage greater than 3V is seen as assert. It is usual to connect the DTR line of the host to the DSR line of this device.

9.4 Audio Cable (voice)

With a pair of these modules it is possible to replace a mono audio cable with two way traffic. That is, a setup where a microphone is connected to a speaker at the remote end and vice versa. So this mode effectively replaces two audio cables.

Assuming the *Bluetooth* address of the master to be <bdaddr_m> and that of the slave to be <bdaddr_s>, the master module is configured by sending it the following AT commands:

```
AT&F*
ATS512=1
ATS504=1
ATS530=2000
ATS532=7
AT&W
AT+BTR<bdaddr_s>
```

And the slave is configured by:

```
AT&F*
ATS512=4
ATS0=-1
AT&W
AT+BTM<bdaddr_m>
```

9.5 Modem Control and Status Signals

A serial port has DTR, DSR, RTS, CTS, DCD and RI control lines. RTS and CTS are locally controlled to prevent local buffer overflow.

The status of DTR, DRS, DCD and RI can be exchanged with the remote peer device. If for example, the DTR/DSR lines are to be exchanged between the two peers to simulate the performance of a physical cable, then it is possible to do so. Refer to the description for S Registers 551, 552 and 553 for more details.

Some serial implementations link CTS and RTS to remove the need for handshaking. Ezurio do not recommend linking CTS and RTS other than for testing and prototyping. If these pins are linked and the host sends data at the point that the *Bluetooth* Serial Module deasserts its RTS signal, then there is a significant risk that internal receive buffers will overflow which could lead to an internal processor crash. This will lead to a drop in connection and may require a power cycle to reset the module.

Ezurio recommend that the correct CTS/RTS handshaking protocol be adhered to for proper operation.

10. Application Information

10.1 Antenna Position

The antenna used on the Embedded Intelligent *Bluetooth* module is designed to be largely immune from the effects of proximity detuning. Normally, antennas operating at 2.4GHz are affected by their surroundings, so that great care is needed in their placement and orientation.

The Embedded Intelligent Serial Module can be used in most locations and orientations and is only marginally affected by the presence of a significant ground plane in close proximity.

The antenna distribution is close to isotropic, which means that the orientation of mounting has only a limited effect on the overall range. However the optimum range is achieved when the two antennae are directly facing each other

The module should not be located in a sealed metal enclosure, as this will act as a Faraday cage and severely attenuate the radio signal. A distance of 6mm has been allowed between the metal shield and the antenna to allow the antenna to protrude through a slow in a metal enclosure.

10.2 External Antenna Module

The dimensions for this module are identical to the Surface Mount Module, but the antenna is replaced with a U.FL connector.

The module is certified for use with the EZURiO external antenna ACC-008. If an alternative antenna is connected, it will invalidate the RF and Bluetooth approvals for the module.

The antenna connector is a U.FL connector, supplied by Hirose. Mating connectors with cables are available from Hirose and their distributors, and also from other cable suppliers. The data sheet for the connector series is available at http://www.hirose.co.jp/cataloge_hp/e32119372.pdf

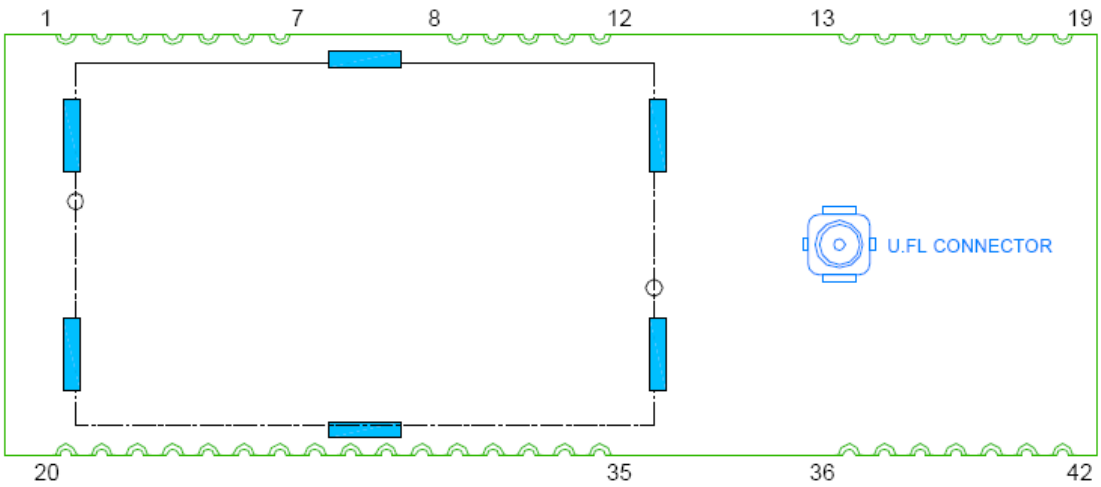

10.3 Power Supply Considerations

The power supply for the Module has to be a single voltage source of Vcc within the range of 3.3 V to 7.0 V. It must be able to provide sufficient current in a transmit burst. This can rise to 65mA.

10.4 Power-On-Reset

The Module is provided with an active low reset pin. Upon the application of power, the Power On Reset circuit built into the Module will ensure that the unit starts correctly. The internal reset circuit is triggered when the input voltage to the module drops below ~1.7V and is hence only suitable for providing a power on reset signal. If the supply voltage to the module can drop below the minimum voltage level in normal operation, then it is recommended that an external brownout circuit is provided to assert the module reset and to ensure that the module is reset when the module supply voltage drops below 3.1V.

This will ensure that the module will return to an operational state when the supply voltage comes back within specification. For example, if the module supply can drop to 2.7V and then be restored to 3.3V there is no guarantee that the module will still be operational unless the reset signal has been asserted.

10.5 RF Shield

To meet FCC requirements and to facilitate IR soldering, all modules are supplied with a soldered RF shield. This meets the requirement that users may not be able to access RF circuitry without special tools. Removal of the shield may negate RF approvals.

10.6 Mounting the Module onto the application platform

The antenna (Brown square component on top side of PCB) is designed to minimise detuning effects from nearby components and metalwork. However, it is good design practise to ensure that other active circuitry is kept away from the antenna.

The proximity of the antenna to large metallic objects can affect the range and performance of the system. Designers should carefully consider the location of the Module and the type of enclosure material that is used.

No tracks should be present on the top layer of the board on which the module is soldered, as these may cause inadvertent connections to test pads. The following are the guidelines for process soldering of the module into an application.

- Ramp @ <1.7°C/sec. to 135-160°C.
- Slow ramp to 150-190°C over 60-90 seconds.
- Ramp @ <2°C/sec. to 232-250 °C peak temp. Time above 221 °C = 35-90 seconds.
- Ramp down to room temperature, minimum at 2 °C per second.
- Solder type : SAC387 (95.5%Sn/3.8%Ag/0.7%Cu).

The recommended land pattern for the mother PCB is detailed below

EZURiO

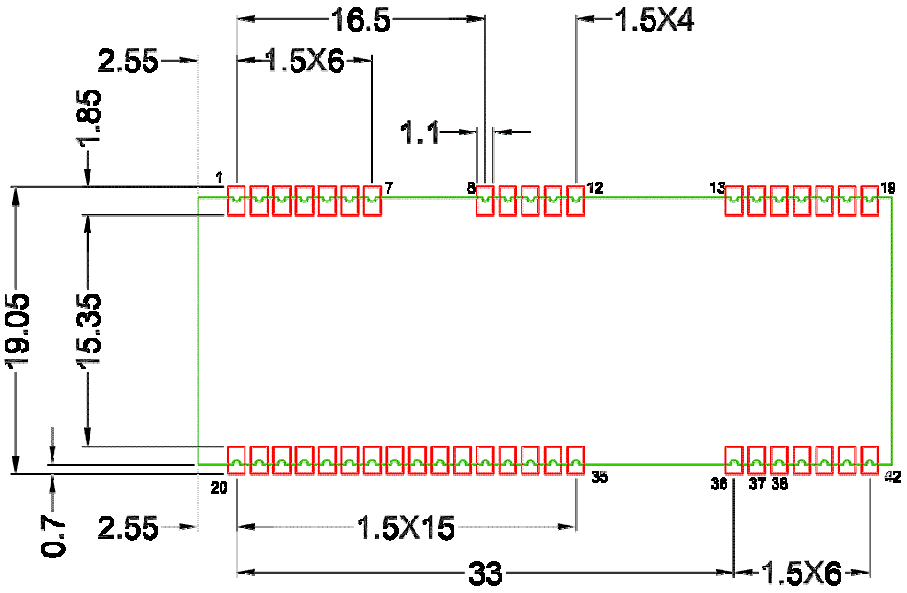

Notes: The motherboard should have no copper, solder resist or tracks beneath the module on the pad layer.

N/C Pins should have no electrical connection, including to other N/C pins, but be mechanical pads only.

11. Qualification

11.1 *Bluetooth* Qualification Process

The following safety precautions must be observed during all phases of the operation, usage, service or repair of any application incorporating this Module. Manufacturers of the RF equipment are advised to convey the following safety information to users and operating personnel and to incorporate these guidelines into all manuals supplied with the product. Failure to comply with these precautions violates safety standards of design, manufacture and intended use of the product. Ezurio assumes no liability for customer failure to comply with these precautions.

11.2 Safety Information:

Switch off the *Bluetooth* device before boarding an aircraft. Make sure it cannot be switched on inadvertently. The operation of wireless appliances in an aircraft is forbidden by many airlines to prevent interference with communications systems. Applications that could result in use on aircraft should carry appropriate warnings.

11.3 Qualifications

11.3.1 RF approvals

The Module is listed as a *Bluetooth* Product in terms of the *Bluetooth* SIG Program Reference Document (PRD). This means that it can be integrated into end products without further testing or approval listing. The manufacturer must state the Ezurio part number and product reference in his literature in order to meet the requirements of the *Bluetooth* and regulatory approvals.

A list of the countries where the Module is approved will be provided by Ezurio as required. As a minimum the product is listed in Europe, Scandinavia and USA. Ezurio assumes no liability for customer failure to comply with national RF approvals.

11.3.1.1 Radio.

EN 300 328 V1.5.1 (2004 – 08)

EN 301 489 – 1 V1.4.1 (2002 – 08)

EN 301 489 – 17 V1.2.1 (2002 – 08)

11.3.1.2 EMC Emissions.

FCC15B Class B

EN55022 Class B

11.3.1.3 EMC Immunity.

EN55024 Class

11.3.1.4 Environmental.

EN300 019-2-4 v2.2.2 (2003-2004)

11.4 Safety and Regulatory Statements

11.4.1 Europe – EU Declaration of Conformity

EZURiO

DECLARATION OF CONFORMITY

In accordance with Annex IV of the EU directive 1999/5/EC

Ezurio declare under our responsibility that the *Bluetooth* Module

complies with the appropriate essential requirements of the Article 3 of the R&TTE and the other relevant provisions, when used for its intended purpose.

Health and Safety requirements contained in Article 3 (1) a)

EN 60 950: 1992 Safety of information technology equipment + Amendment A1:1993, Amendment A2:1993, Amendment A3:1995, Amendment A4:1997, Amendment A11:1997

EN 50371: Generic standard to demonstrate the compliance of low-power electronic and electrical apparatus with the basic restrictions related to human exposure to electromagnetic fields (10 MHz - 300 GHz) – General public

Protection requirements with respect to electromagnetic compatibility Art.3 (1) b)

EN 301 489-1 V1.4.1 (2002-08) according to the specification details in EN 301 489-17 V1.2.1 (2002-08), Electromagnetic Compatibility and radio spectrum Matters (ERM); Electro Magnetic Compatibility (EMC) standard for radio equipment and services; Part 17: Specific conditions for wideband data HiperLAN equipment

Means of the efficient use of the radio frequency spectrum

EN 300 328 V1.5.1 (2004 – 08), Radio Equipment and Systems (RES); Wideband transmission systems; Technical characteristics and test conditions for data transmission equipment operating in the 2,4 GHz ISM band and using spread spectrum modulation techniques. Part 2: Harmonized EN covering essential requirements under article 3(2) of the R&TTE directive.

Ezurio Ltd
Unit 2, 126 Colindale Avenue, Colindale
London NW9 5HD, United Kingdom

tel: +44 (0)20 8938 1000
fax: +44 (0)20 8905 8608
www.ezurio.com

Registered in England
No. 5178293

11.4.2 FCC and Industry Canada Statements

This device complies with part 15 of the FCC Rules. Operation is subject to the following two conditions: (1) This device may not cause harmful interference, and (2) this device must accept any interference received, including interference that may cause undesired operation.

Changes or modifications not expressly approved by the party responsible for compliance could void the user's authority to operate the equipment.

To comply with the FCC RF exposure compliance requirements, this device and its antenna must not be co-located or operated in conjunction with any other antenna or transmitter.

11.4.2.1 FCC Labelling requirement

If the FCC ID is not visible when the module is installed inside another device, then the outside of the device into which the module is installed must also display a label referring to the enclosed module. This exterior label can use wording such as the following: "Contains Transmitter Module FCC ID: PI403B" or "Contains FCC ID: PI403B." Any similar wording that expresses the same meaning may be used.

12. Environmental

12.1 Operating temperatures

Parameter	Min	Typ	Max	Unit
Operating temp (standard product)	-40	25	+85	°C

12.2 Storage temperature

Parameter	Min	Max	Unit
Storage temp	-40	+125	°C

12.3 Reliability

Parameter	Test	Comment
Thermal Shock	200 cycles -40ºC /+85ºC 30 min	1 cycle/hour
Vibration	Continuous operation at 60 Hz, 2mm stroke	15g max sine wave, 12 hours
Shock	50G 11ms Half Sine Wave	6 axis x 3 cycles each axis
Moisture Resistance		
High Temp Storage	125ºC, 360 hours	
Low Temp Storage	-40ºC, 240 hours	
High Temp/Humidity Operation	60ºC, 90%RH, 360 hours	
Thermal shock	-40 to 60ºC in 30min	200 cycles with continuous operation
Electro Static Discharge	EN55024:1998 & IEC61000-4-3	
Drop Test	75cm to concrete, 3 axis x 2 cycles per corner	

13. Physical Dimensions (all dimensions in mm)

13.1 Top View

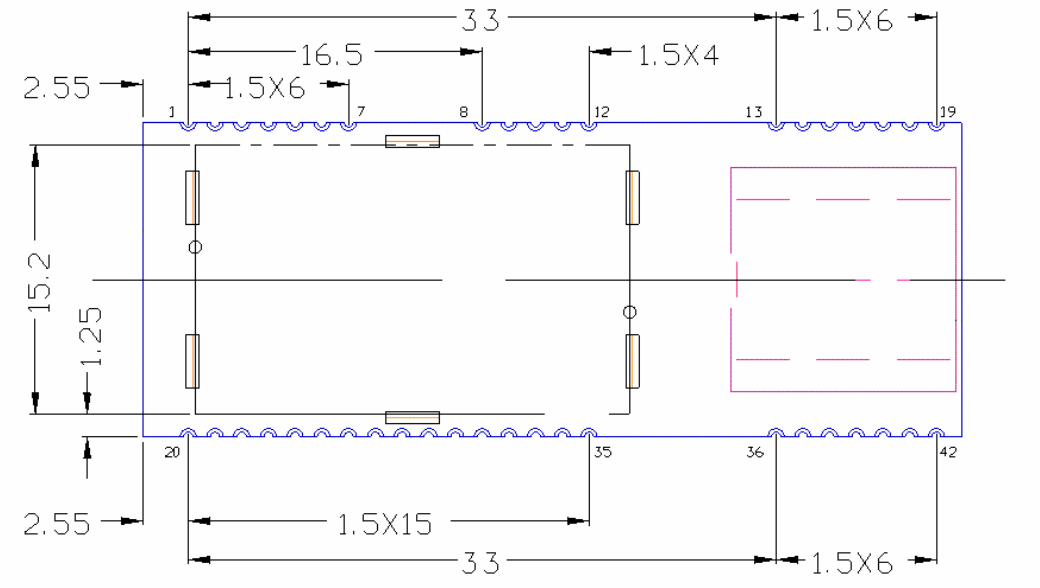

13.2 Bottom View

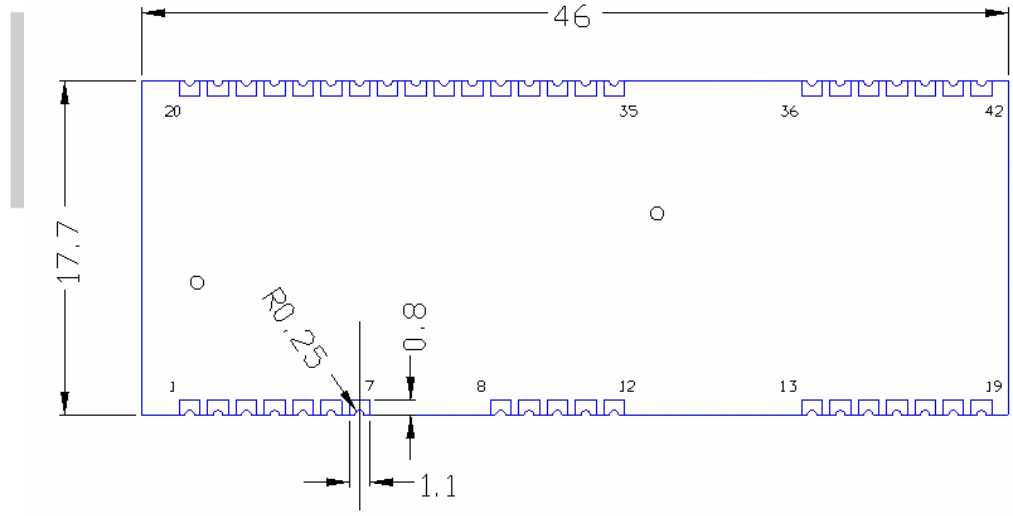

13.3 Side View

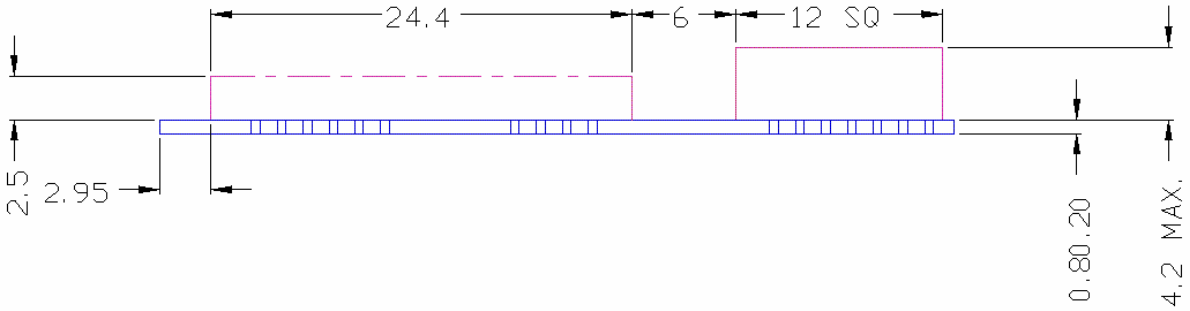

13.5 Ordering Information

The Embedded Intelligent *Bluetooth* Serial Module is supplied with the EZURiO AT firmware, variations in firmware do occur during the life of the product. Ordering information is provided below:

Part Number	Description
BISMS02BI-01	Embedded Module with integrated ceramic antenna and standard AT firmware
BISMS02BI-NA	Embedded Module with no antenna and standard AT firmware

14. Related Documents

The firmware incorporated into the Embedded Intelligent Bluetotoh Module is the same as that for the BISM2 Module. All of the firmware documentation and application data for the BISM2 module can be used for this module.

- blu2i AT Command Set Reference Manual
- blu2i Firmware Release Notes
- blu2i Multipoint Firmware Reference Manual
- Intelligent *Bluetooth* Serial Module - Quick Start Guide
- Intelligent *Bluetooth* Serial Module – FAQ
- Wireless Developer's Kit User Guide
- ACC-005 Winbond W61360 Audio Codec Board Manual
- ACC-006 OKI 7702 Audio Codec Board Manual
- blu2i Application Scenarios
- *Bluetooth* Core 2.0 Specification – www.*Bluetooth*.org

15. Disclaimers

EZURIO'S *BLUETOOTH* PRODUCTS ARE NOT AUTHORISED FOR USE AS CRITICAL COMPONENTS IN LIFE SUPPORT DEVICES OR SYSTEMS WITHOUT THE EXPRESS WRITTEN APPROVAL OF THE MANAGING DIRECTOR OF EZURIO LTD.

The definitions used herein are:

a) Life support devices or systems are devices which (1) are intended for surgical implant into the body, or (2) support or sustain life and whose failure to perform when properly used in accordance with the instructions for use provided in the labelling can reasonably be expected to result in a significant injury to the user.

b) A critical component is any component of a life support device or system whose failure to perform can be reasonably expected to cause the failure of the life support device or system, or to affect its safety or effectiveness.

Ezurio does not assume responsibility for use of any of the circuitry described, no circuit patent licenses are implied and Ezurio reserves the right at any time to change without notice said circuitry and specifications.

15.1 Data Sheet Status

This data sheet contains data from the Preliminary specification. Supplementary data will be published at a later date. Ezurio Ltd reserve the right to change the specification without notice in order to improve the design and supply the best possible product.

Please check with Ezurio Ltd for the most recent data before initiating or completing a design.

15.2 Warranty

Ezurio warrants that its products shall conform to Ezurio's published specifications and remain free from defects in materials and workmanship under normal, proper and intended use for a period of two (2) years from date of purchase, provided that proof of purchase be furnished with any returned equipment.

If during the warranty period any component part of the equipment becomes defective by reason of material or workmanship, and Ezurio is immediately notified of such defect, Ezurio shall at its option supply a replacement part or request return of equipment, freight prepaid, to its designated facility for repair. In the event no trouble is found on products returned for repair, Ezurio reserves the right to charge the customer its standard published repair charge.

This warranty shall not apply to any products that have been subject to misuse, bending, twisting, neglect, alteration, improper installation, testing or unauthorized repair performed by anyone other than an Ezurio designated repair facility. Any non-warranty repairs or maintenance shall be at Ezurio's standard rates in effect at the time.

This warranty is in lieu of all other warranties, whether expressed, implied, or statutory, including but not limited to, implied warranties or merchantability and fitness for a particular purpose. In no event shall Ezurio be liable, whether in contract, in part, or on any other basis, for any damage sustained by its customers or any other person arising from or related to loss of use, failure or interruption in the operation of any products, or delay in maintenance, or for incidental, consequential, in direct, or special damages or liabilities, or for loss of revenue, loss of business, or other financial loss arising out of or in connection with the sale, lease, maintenance, use, performance, failure, or interruption of these products.

EZURiO