Tflex 200V0 Thermal Reliability Report

Summary

The Laird Technologies gap filler reliability test procedure has been designed to characterize the long-term performance of a gap pad while being subjected to isothermal conditions, repeated extremes in temperature, and moderate heat - high humidity environments. Specimens are placed within application-related fixtures under set conditions and at regular intervals the thermal properties of the specimens are measured.

Fixture Setup

The test fixture is rectangular with dimensions of 2” x 5” (surface area of 10 in^2). It consists of an aluminum heater plate and an extruded aluminum heat sink “cooler plate”. The heater plate contains 3 holes for insertion of cartridge heaters. Both plates contain 3 sets of thermocouple holes drilled for measurement of the temperature very near the surfaces mated by the gap pad. Each test fixture accommodates 3 test positions. The heater and cooler plates are held together by metal straps which span the width of the plates (2 sets per test fixture) and are bolted to each other. Cartridge heaters are inserted into the heater plate holes. A specified power from a power supply is input to the heaters to obtain a constant 70^0C across the heater plate. This will ensure a constant heat flow is maintained through the gap filler during data acquisition. A cooling fan is centered on top of the heat sink during testing to facilitate realistic air flow and cooling. Test values are measured in an ambient laboratory environment.

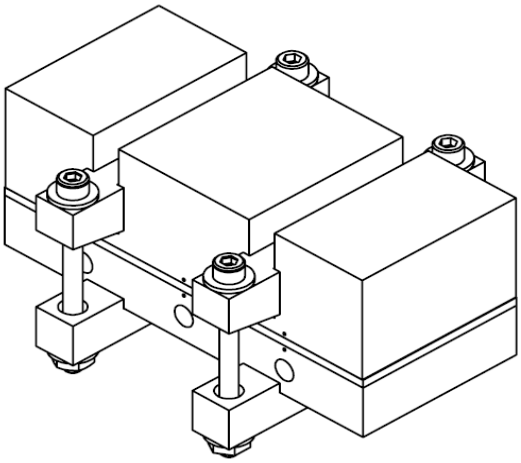

A16344—00 Rev B
09/20/10, EO #9781

Theory

The data being collected during this testing is the temperature difference between the surfaces of the heater and cooler plate. Thermal resistance (R_{th}) is defined as the temperature difference (ΔT) between two surfaces for a given heat flow (ΔP). That is: $R_{th} = \Delta T / \Delta P$. In this testing, heat flow is controlled and constant, therefore, $R_{th} \alpha \Delta T$. This relationship indicates that a constant value of ΔT throughout the test program requires R_{th} to also remain constant, indicating a highly reliable system and thus a gap pad that is not influenced by the test conditions.

Types of Reliability Testing

Thermal Shock

In thermal shock testing, the test fixtures containing the specimens are transitioned between -40^{0}C and 160^{0}C with a 1 hour hold to reach thermal equilibrium at each temperature extreme. The transfer time between the oven temperatures is quick, typically less than 20 seconds. 1000 cycles "Shocks" are performed on each fixture.

Isothermal Bake

In isothermal bake testing, fixtures are maintained at 160^{0}C for 1000 hours.

HAST

In HAST testing, the fixtures are maintained in conditions of moderate temperature (85^{0}C) and high humidity (85%) for the duration of the test.

Results

The thicknesses of Tflex 200V0 tested were 20mil (0.508mm), 40mil (1.016mm), and 200mil (5.08mm). Two fixtures for each thickness were assembled and tested for all three reliability testing types (3 test positions for each unit). The data reported is the average of each value for the two fixtures.

The change in temperature (ΔT) vs. time / # of cycles tested is reported below:

Thermal Shock

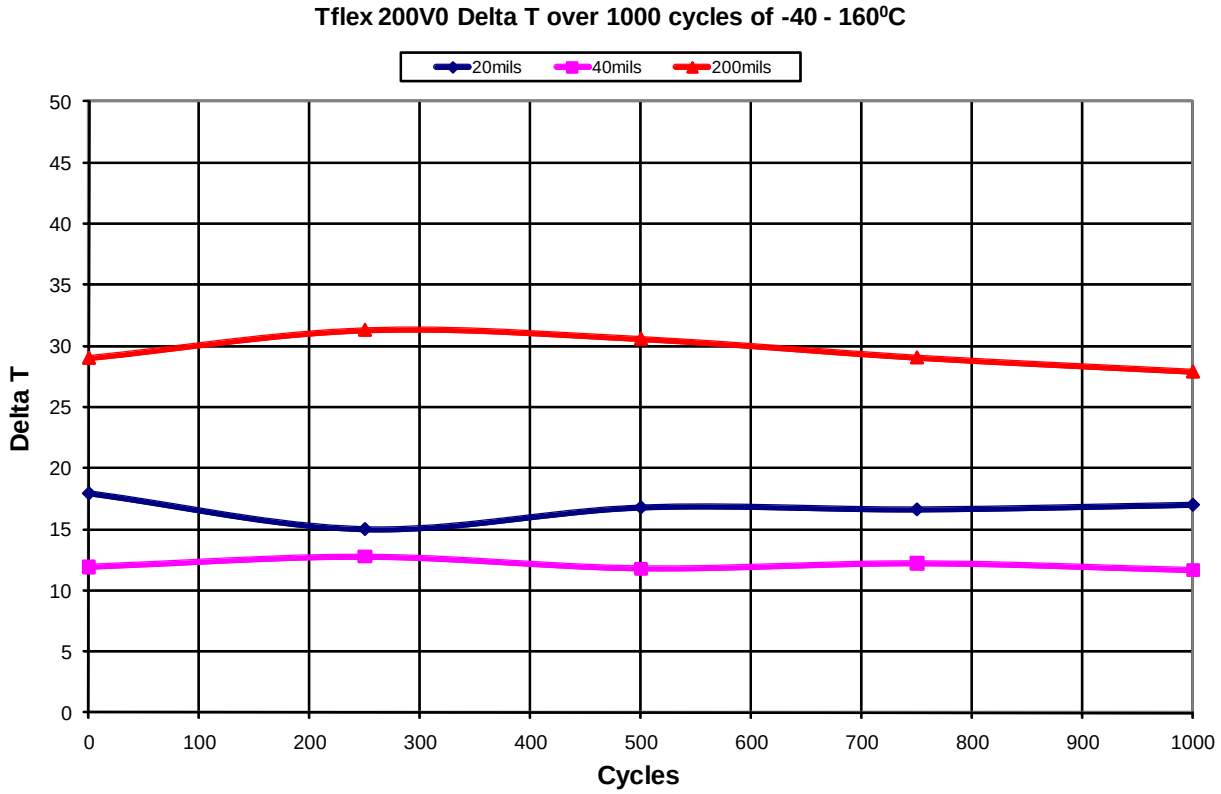

Material	Cycles	Avg ΔT
Tflex 220V0	0	17.97
	250	15.00
	500	16.80
	750	16.63
	1000	17.02
Tflex 240V0	0	11.92
	250	12.75
	500	11.79
	750	12.21
	1000	11.65
Tflex 2200V0	0	28.99
	250	31.31
	500	30.58
	750	29.03
	1000	27.86

Isothermal Bake

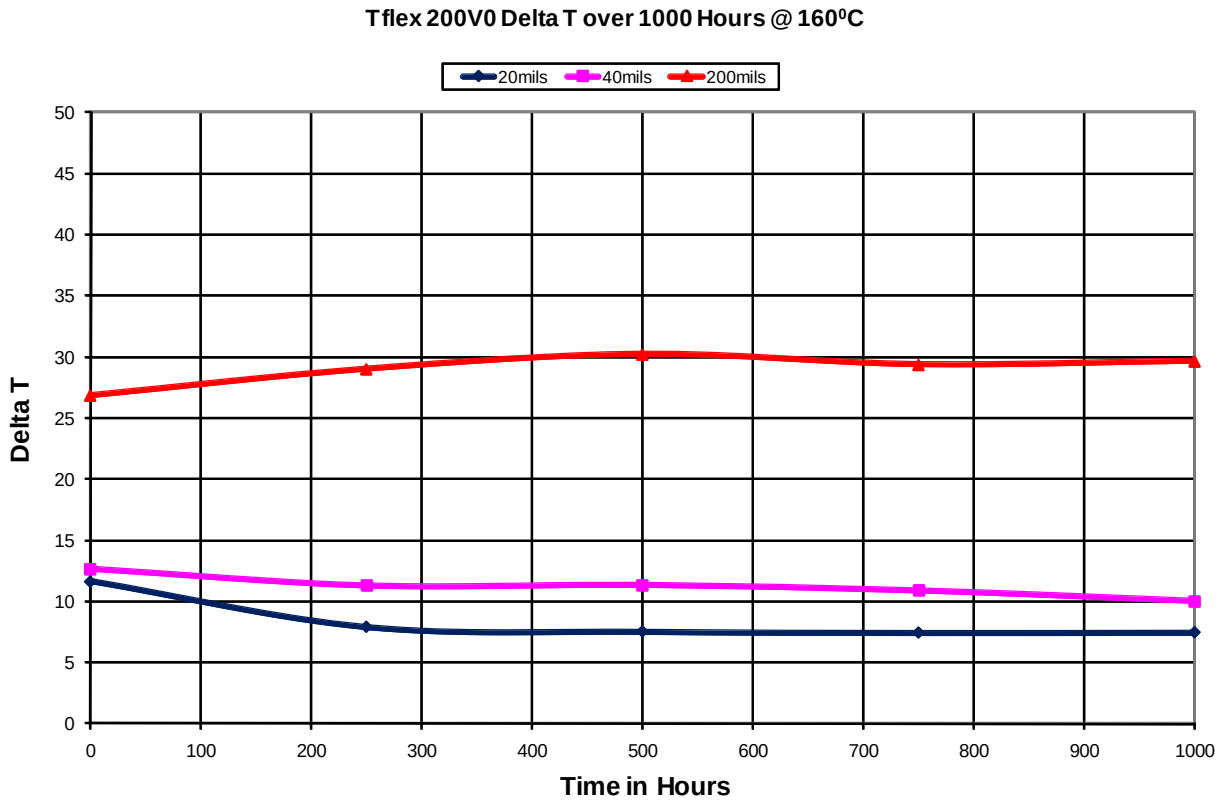

Material	Hours	Avg ΔT
Tflex 220V0	0	11.64
	250	7.92
	500	7.54
	750	7.44
	1000	7.47
Tflex 240V0	0	12.63
	250	11.27
	500	11.31
	750	10.86
	1000	10.00
Tflex 2200V0	0	26.84
	250	29.01
	500	30.22
	750	29.37
	1000	29.66

HAST

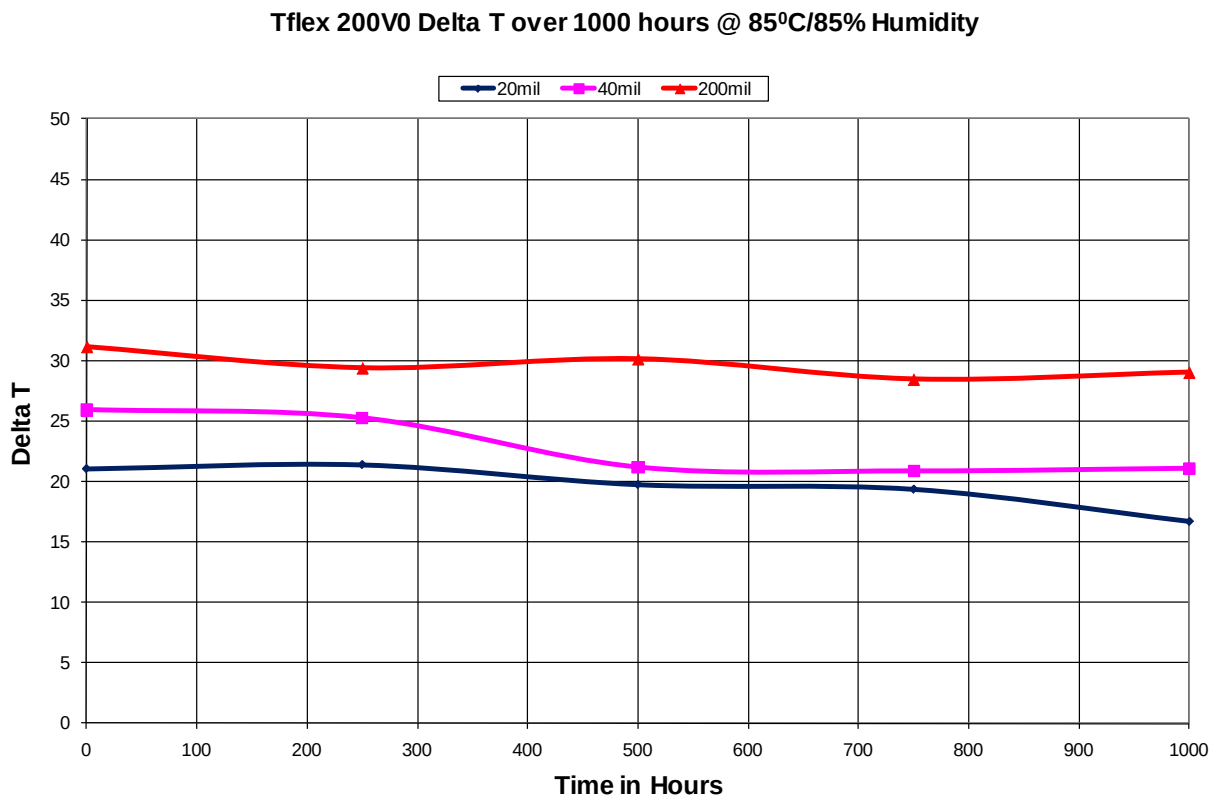

Material	Hours	Avg ΔT
Tflex 220V0	0	21.05
	250	21.38
	500	21.18
	750	19.75
	1000	19.42
Tflex 240V0	0	25.93
	250	25.25
	500	21.18
	750	20.87
	1000	21.08
Tflex 2200V0	0	31.15
	250	29.39
	500	30.14
	750	28.46
	1000	29.03

Conclusion:

The graphs and data show that Tflex 200V0 performed an average of slightly better at the end point for Thermal Shock, Isothermal Bake, and HAST testing than at Time T_0. The ΔT was reduced 3.81%, 15.7%, and 11.1% respectively during the duration of testing. This decrease in ΔT is most likely due to the pads natural ability to wet-out the surfaces in which it is in contact with. This wetting effect is caused by the pad filling the microscopic voids on the surfaces of the heat-generating component and heat sink. For instance, if the heat sink was placed atop the component without a thermal interface material, these small irregularities will not be filled, and the overall ΔT would be higher. Based upon this data, no thermal degradation was evidenced and therefore, it is shown that Tflex 200V0 will continue to perform as designed in applications under harsh environmental conditions similar to those tested.

Michael D. Craig
R&D Chemist
7/21/2010