Laird TECHNOLOGIES

Innovative **Technology** for a **Connected** World

S2401240P12NF

2.4-2.5 GHz 12 dBi, 40° H-plane Panel Antenna

INDOOR / OUTDOOR LOW PROFILE DIRECTIONAL ANTENNA

Laird Technologies' S2401240P12NF antenna offers high-gain and a narrow H-plane beamwidth and is a perfect choice in instances when an attractive, low profile high-gain directional antenna is required. The antenna's neutral, contemporary housing blends seamlessly into any indoor or outdoor environment and can be mounted to interior and exterior wall surfaces, masts, and other common mounting platforms.

The antenna is only 6 x 6 x 1.25 inches in size making it easy to work into any indoor or outdoor WLAN or broadband wireless application. The antenna can either be mounted directly to a wall surface or can be mounted using an articulating mount that allows for adjustment in both the azimuth and the elevation planes.

FEATURES

- High gain, low profile
- Indoor/outdoor use
- Various connector types and cable lengths available

MARKETS

- Enterprise WLAN systems
- Wireless bridges
- Industrial and educational campuses
- Business and healthcare complexes
- Systems that require a low profile, directional panel in the 2.4-2.5 GHz
- WiMAX

PARAMETER	SPECIFICATION
Frequency Range (MHz)	2400-2500
Gain dBi (with 12 in cable)	12
E-Plane 3 dB Beamwidth	35°
H-Plane 3 dB Beamwidth	40°
Impedance (Ohms)	-
Weight oz (kg) (with 12 in cable)	11 (0.13)
VSWR max	1.5:1
Mount Style	Wall
Dimensions	6 x 6 x 1.25 in
Enclosure	Polycarbonate
Power (Watts)	25
RF Connector	Type N (f)
Pigtail	12 in standard

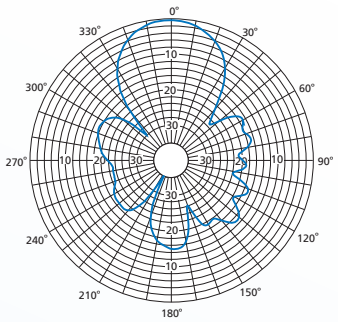

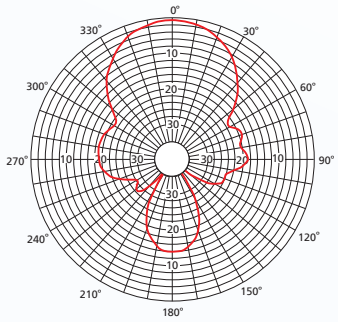

E-Plane
H-Plane

global solutions: local support™

Americas: +1.847 839.6907
IAS-AmericasEastSales@lairdtech.com

Europe: +1.32.80.7866.12
IAS-EUSales@lairdtech.com

Asia: +1.65.6.243.8022
IAS-AsiaSales@lairdtech.com

www.lairdtech.com

ANT-DS-S2401240P12NF 0611

Any information furnished by Laird Technologies, Inc. and its agents is believed to be accurate and reliable. Responsibility for the use and application of Laird Technologies materials rests with the end user, since Laird Technologies and its agents cannot be aware of all potential uses. Laird Technologies makes no warranties as to the fitness, merchantability or suitability of any Laird Technologies materials or products for any specific or general uses. Laird Technologies shall not be liable for incidental or consequential damages of any kind. All Laird Technologies products are sold pursuant to the Laird Technologies' Terms and Conditions of sale in effect from time to time, a copy of which will be furnished upon request. © Copyright 2011 Laird Technologies, Inc. All Rights Reserved. Laird, Laird Technologies, the Laird Technologies Logo, and other marks are trade marks or registered trade marks of Laird Technologies, Inc. or an affiliate company thereof. Other product or service names may be the property of third parties. Nothing herein provides a license under any Laird Technologies or any third party intellectual property rights.