Laird TECHNOLOGIES

Innovative Technology for a Connected World

Application Note

Common Mode Choke Filtering Improves CMRR in Ethernet Transformer Applications

June 2011

Common mode chokes provide an effective EMI filtering solution for Ethernet transformer applications. Common mode chokes withstand high DC currents without degradation of filtering performance. Stable common mode chokes allow most signals to pass unaffected, yet filter the noise (EMI) from these circuits.

Ethernet transformers were originally designed to bundle the cabling of the system. But as design specifications have forced board components to become smaller, the need for those components to be multi-functional is greater than ever. One of those additional functions for Ethernet transformers is isolation, which helps eliminate noise.

Modern systems are frequently an interconnection of functional blocks and connections made by cables or wiring harnesses. These interconnections often present the opportunity for common mode current loops between devices that can lead to EMI regulatory failure.

The addition of a common mode choke filters these common mode currents while allowing the desired signals to pass unaffected.

global solutions : local support.

Corporate Contact:
1.636.898.6000

www.lairdtech.com

Common Mode Choke Filtering Improves CMRR in Ethernet Transformer Applications

Common mode chokes filter common mode EMI currents without causing signal degradation and without derating under high currents. These components are applied to pairs of conductors – supply and return. The addition of a common mode choke before the connector filters these common mode currents while allowing the desired signals to pass unaffected. The result is effective communication between devices, reliable product and system operation and product EMI regulatory compliance.

Differential Mode and Common Mode Explanation

Common mode chokes are the ideal components for EMI filtering of power and signal lines. These components withstand high DC currents without degradation of filtering performance that can occur with differential mode filters like small chip beads. Stable common mode chokes allow most signals to pass unaffected, yet filter the noise (EMI) from these circuits.

Most well-designed power and signal circuits present no EMI that is caused from intended currents. As an example, at 30 MHz, a pair of traces or wires 1 m long, separated by 1.3 mm, requires over 20mA differential current imbalance to exceed 100mV/m radiation 3 m away. However, unintended, unforeseen common mode currents can exceed 100mV/m radiation with only 8mA common mode current flow. Suppression of these tiny common mode currents is often crucial to assuring EMI regulatory compliance and reliable product performance.

Accompanying the rapid increase of electronic circuit speed, the signal frequency in a circuit is already higher to the EMI noise frequency range. The EMI design becomes a critical issue. The traditional parallel signals possess some disadvantages and cannot normally work in the high frequency. Featuring high anti-interference with low EMI, series signals like USB, SATA, PCIe, etc. are popular alternative for replacing parallel signals which are utilized in current designs.

.

© Copyright 2011 Laird Technologies. All Rights Reserved.

Differential Mode and Common Mode Signal

The differential signal has high anti-interference and low EMI performance. It is now widely used in the high speed digital systems like USB, SATA, and HDMI, etc. Common mode and differential mode currents and voltages are always defined relative to the ground. Generally, a signal contains both differential and common mode signals.

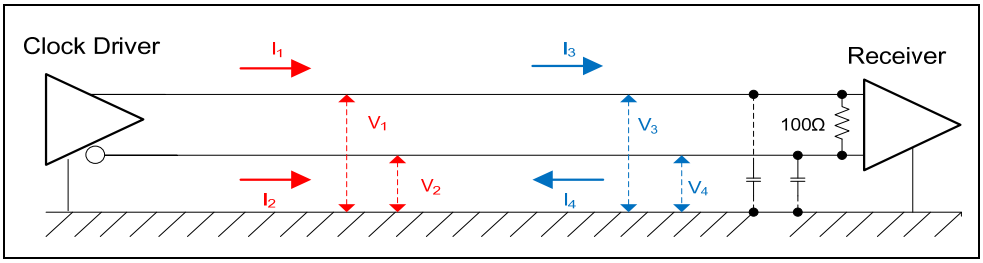

Diagram 1: Differential and Common Mode Signal

Diagram 1 shows a clock driver output of a differential signal to a receiver which contains a common mode signal in the same time. Below is the current and voltage equation of common mode and differential mode signals.

Common Mode Signal	Differential Mode Signal
$I_1 = I_2$	$I_3 = -I_4$
$V_1 = V_2$	$V_3 - V_4 = V_{diff}$
$\sum I = I_1 + I_2$	$\sum I = I_3 + I_4 = 0$

Common mode currents flow with the same voltage and direction, and go to ground by the parasitic capacitances between the lines and ground. There is no common mode current flow through the load of the receiver because there is no voltage difference on the load.

© Copyright 2011 Laird Technologies. All Rights Reserved.

Diagram 2 and Diagram 3 show a differential mode signal which contains useful information. The current phase difference is 180°, where the current fully flows through the load, and where there is no current going to the ground.

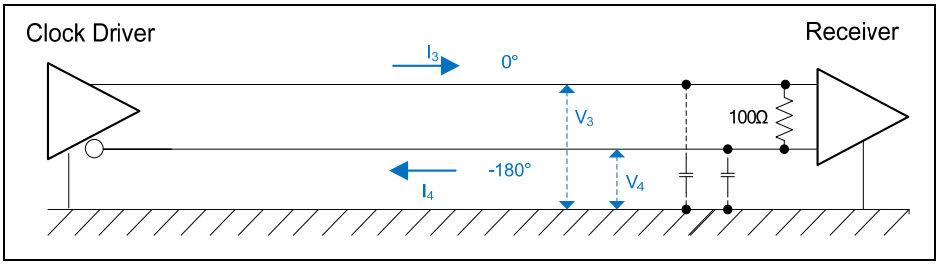

Diagram 2: Differential Mode Signal

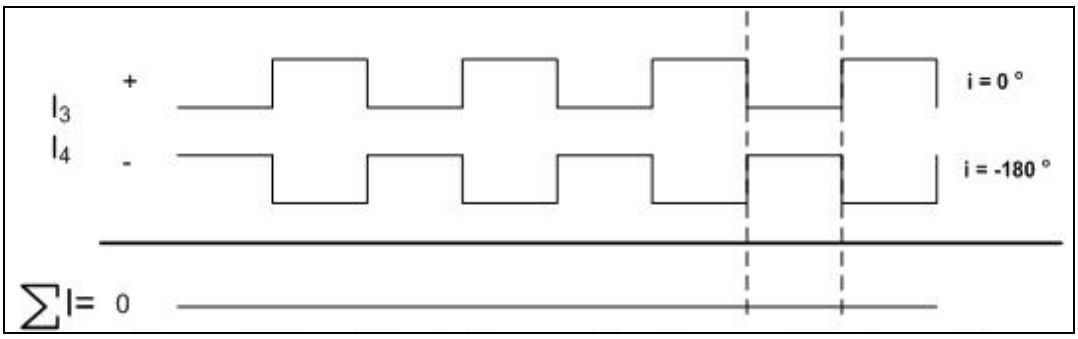

Diagram 3: Phase Different of the Currents and No Current Flow to Ground

Because field strength in the two lines creates equal and opposing electromagnetic fields, they tend to cancel each other out and reduce crosstalk and EMI emission.

© Copyright 2011 Laird Technologies. All Rights Reserved.

Common Mode Choke

Differential mode current, flowing in opposite directions through the choke windings, creates equal and opposite magnetic fields, represented by the black lines in Diagram 4. Cancelling each other out results in the choke presenting zero impedance to the differential mode signal, which passes through the choke un-attenuated.

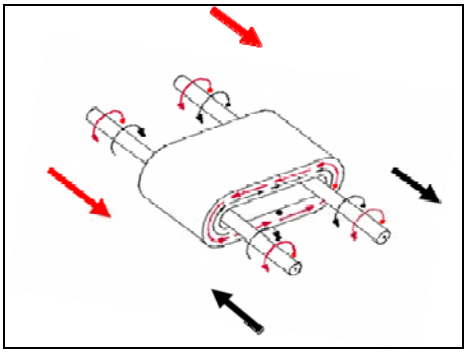

Diagram 4: Common Mode Choke

Common mode current, the unintended component of signal current, is the main source of EMI and should be suppressed. The common mode current flows in the same direction through each of the choke windings, represented by the red lines in Diagram 4. This creates equal and in-phase magnetic fields which add together and results in the choke presenting high impedance to the common mode signal, which passes through the choke heavily attenuated.

Ethernet Transformer Operation Principle

Diagram 5 is Ethernet transformer operation principle. The winding polarity of a center-tapped transformer is as shown in the diagram.

The transformer is a 1:1 for the signal transfer between two sides. For the differential signal of Tx+ and Tx-, the current Tx+ is equal to Tx- with opposite direction. But for the common mode current, the Icom will flow into the ground through the center-tap because of no impedance in the opposite direction winding of the transformer for the common mode current.

So the transformer has two functions: the first is isolation of the input and output for safety purposes. The second is rejection of the common mode signal which may create EMI noise, but does not affect the useful differential signal. Because of the non-ideal isolation and un-balance of the transformer, it still has some leakage when the common mode current flow crosses the

© Copyright 2011 Laird Technologies. All Rights Reserved.

transformer. The Igcom represents the leakage current as it crosses the transformer, which may create EMI noise that should be equal to zero under ideal circumstances.

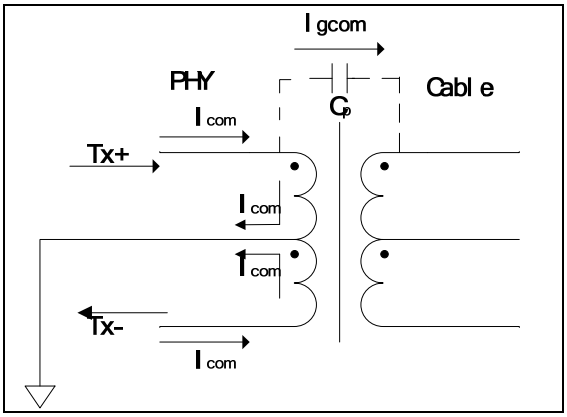

Diagram 5: Ethernet Transformer Operation Principle

Definition of Common Mode Rejection Ratio (CMRR)

Common mode rejection ratio (CMRR) is defined as the rejection ability for common mode noise: CMRR=20 log V2/V1. With a larger CMRR, the noise is attenuated, resulting in the need for larger suppression of the noise. The CMRR test diagram is shown below:

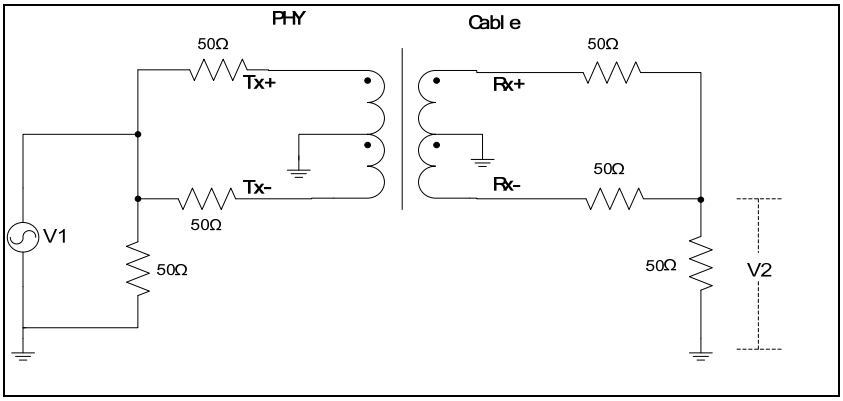

Diagram 6: Ethernet Transformer CMRR Test Circuit

© Copyright 2011 Laird Technologies. All Rights Reserved.

Common Mode Choke with Ethernet Transformer

Diagram 7 is a common mode choke put in the Ethernet differential signal lines. For the differential signal of Tx+ and Tx-, the current Tx+ is equal to Tx- with opposite direction. The common mode choke will not affect the differential signal because the flux is opposite and will be canceled.

For the common mode current, the high frequency Icom noise is first attenuated by the transformer. Igcom leakage flows cross the transformer and the Igcom will be attenuated by the common mode choke again before flow to the cable side. The CMRR cut-off frequency can be changed by common mode choke selection and through the adjustment of the C.

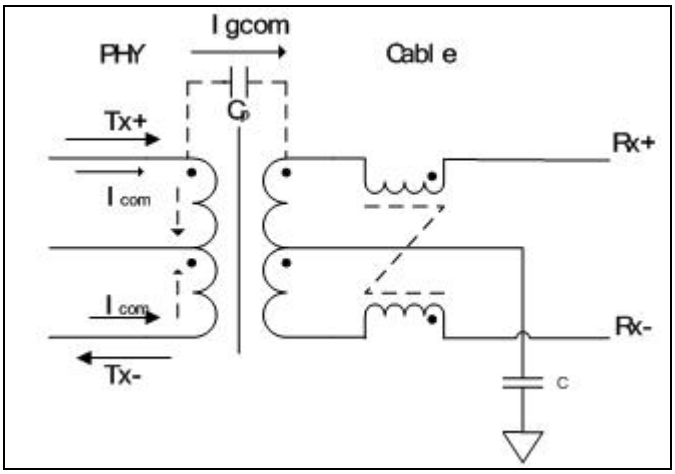

Diagram 7: Ethernet Transformer with a Common Mode Choke

© Copyright 2011 Laird Technologies. All Rights Reserved.

The Laird Technologies CH and CM series common mode choke can be used for this application and also for high speed Ethernet communication application. The common mode choke will help to improve the CMRR by reducing EMI noise with the transformer altogether. Diagram 8 is schematic of an Ethernet connector that is combined with common mode chokes.

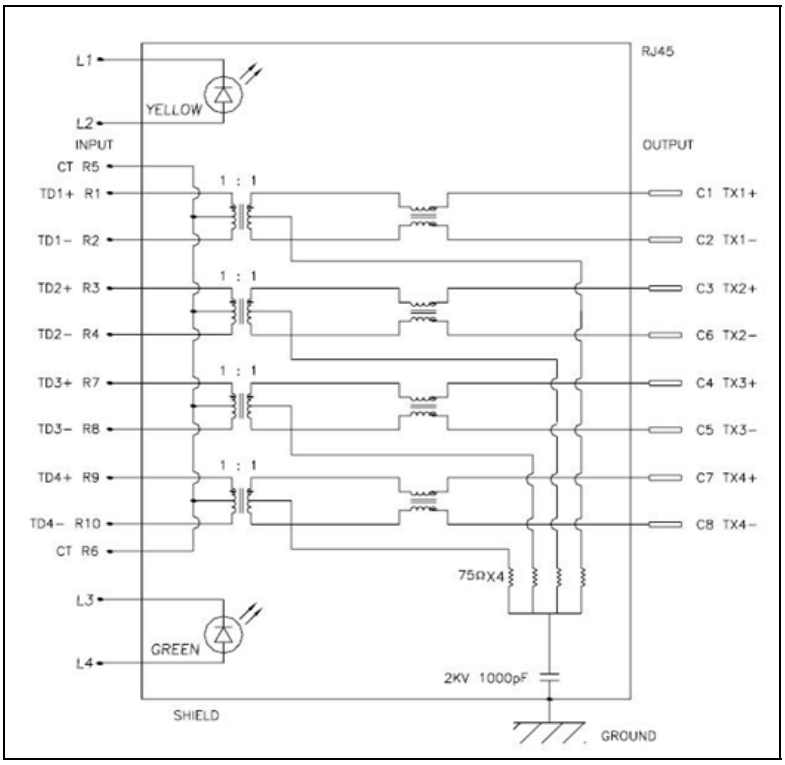

Diagram 8: Ethernet Connector and Schematic

© Copyright 2011 Laird Technologies. All Rights Reserved.

As communication technology growth increases, the network speeds become higher and higher as well. Laird Technologies has also developed 3-line common mode chokes, which are used in the Ethernet transformer cable side to increase the attenuation in all three of the lines for 10G Ethernet applications, thereby further improving CMRR.

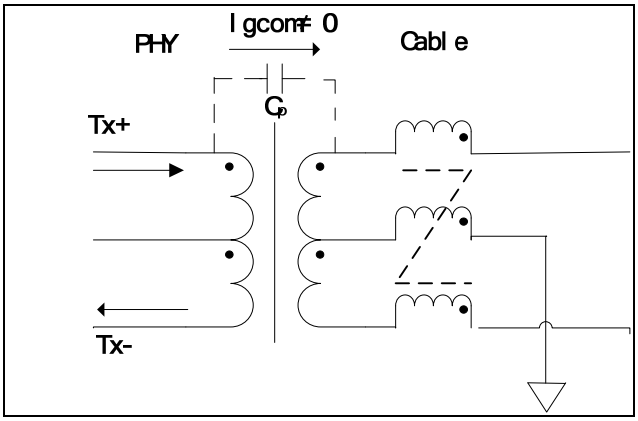

Diagram 9: Ethernet Transformer with a 3-Line Common Mode Choke

Summary

Suppression of EMI has become a major concern in the transmission, reception, and processing of electronic signals and data. Modern systems are frequently an interconnection of functional blocks and connections made by cables or wiring harnesses. These interconnections often present the opportunity for common mode current loops between devices that can lead to EMI regulatory failure. The addition of a common mode choke before the connector filters these common mode currents while allowing the desired signals to pass unaffected. The result is effective communication between devices, reliable product and system operation and product EMI regulatory compliance.

© Copyright 2011 Laird Technologies. All Rights Reserved.

About Laird Technologies, Inc.

Laird Technologies designs and manufactures customized, performance-critical products for wireless and other advanced electronics applications.

The company is a global market leader in the design and supply of electromagnetic interference (EMI) shielding, thermal management products, specialty metal products, signal integrity components, and antenna solutions, as well as radio frequency (RF) modules and wireless remote controls and systems.

Custom products are supplied to all sectors of the electronics industry including the handset, telecommunications, data transfer and information technology, automotive, aerospace, defense, consumer, medical, mining, railroad and industrial markets.

Laird Technologies, a unit of Laird PLC, employs over 12,000 employees in more than 49 facilities located in 16 countries.

Contact Information

For additional information, visit http://www.lairdtech.com or contact us at:

Americas: +1-800-634-2673 option 1 or SIP-AmericaSales@lairdtech.com

Europe: +420-488-575277 or +44-(0)-7545-208008, or SIP-EUSales@lairdtech.com

Asia: +86 757 2563 8860 or SIP-ChinaSales@lairdtech.com

Trademarks

© 2011 All rights reserved. Laird Technologies and its logo are trademarks of Laird Technologies, Inc. Other products, logos, and company names mentioned herein, may be trademarks of their respective owners.