Laird TECHNOLOGIES

Innovative **Technology** for a **Connected** World

S4901790PNF
5 GHz High Performance 90° Sector Antenna

90° V-POL 4.9-5.85 GHZ HI GAIN SECTOR ANTENNA

Laird Technologies' new S4901790PNF antenna offers full frequency band coverage from 4.90 to 5.85 GHz. and is designed to provide wide angle directional coverage from a wall or mast mounting location. The antenna can also be used as part of a sectorized omni-directional base antenna with four antennas used to provide 360° coverage from the site. The antenna is enclosed in a rugged UV stabile ASA radome designed to provide years of trouble free service.

FEATURES ✓RoHS

- Rugged tilt mount hardware included
- Extraordinary low side lobe performance
- Maximum null fill below the horizon
- Best-in-class f/b ratio
- Outstanding levels of antenna-to-antenna co-located isolation

MARKETS

- 802.11a enterprise access point system
- Educational and industrial campuses
- Business and healthcare complexes
- Transportation centers
- WiMAX

PARAMETER	SPECIFICATION
Frequency range	4-90-5.85 GHz
Minimum gain	16.5 dBi
Maximum VSWR	2.0:1
3 dB Beamwidth - Elevation	5.5°
3 dB Beamwidth - Azimuth	90°±7°
Elevation null fill	Down to -25°
Azimuth sidelobes	ETSI EN 302 085 CS1
Polarization	Vertical
Maximum input power	10 W
Input impedance	50 Ohm
Minimum front-to-back isolation	25 dB
Minimum cross-polarization	15 dB
Dimensions	24.66 in x 2.0 in x 2.74 in (62.6 cm x 5.0 cm x 6.9 cm)
Weight (antenna only)	1.95 lbs.
Antenna connector	N female
Wind survival rating	Operational 100 mph / Survival 136 mph
Mount style	Mast mount
Mounting hardware	15° tilt mount for 1.5 in to 3.5 in dia.
Temperature	-40° C to 70° C
Lightning protection	DC -Grounded

global solutions: local support™

Americas: +1.847 839.6907
IAS-AmericasEastSales@lairdtech.com

Europe: +1.32.80.7866.12
IAS-EUSales@lairdtech.com

Asia: +1.65.6.243.8022
IAS-AsiaSales@lairdtech.com

www.lairdtech.com

Innovative **Technology** for a **Connected** World

S4901790PNF

5 GHz High Performance 90° Sector Antenna

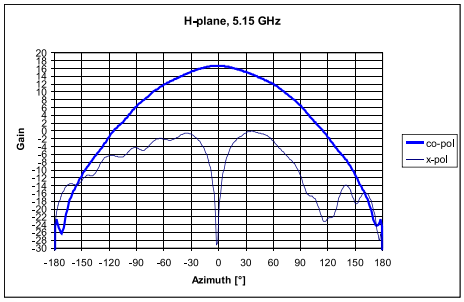

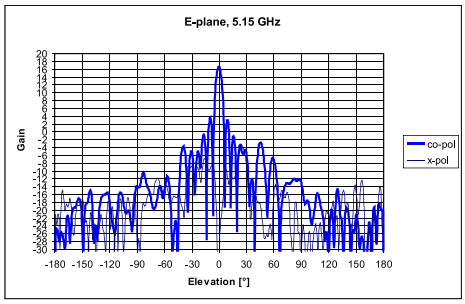

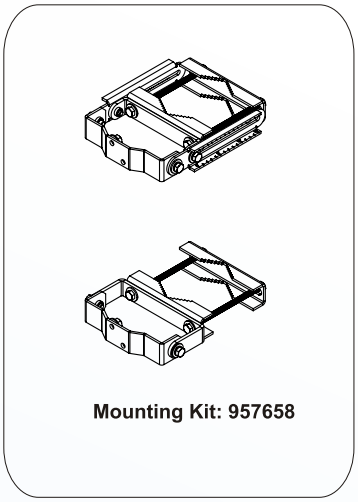

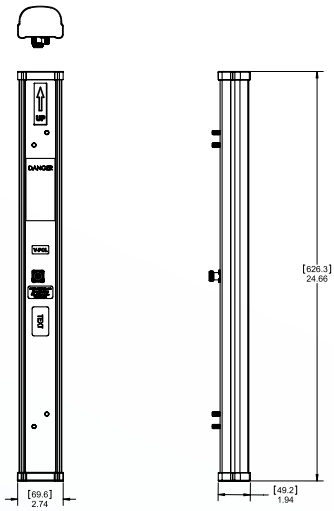

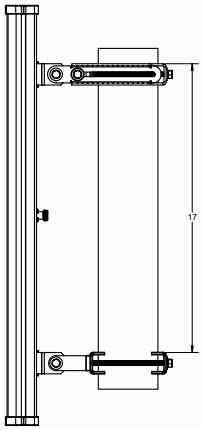

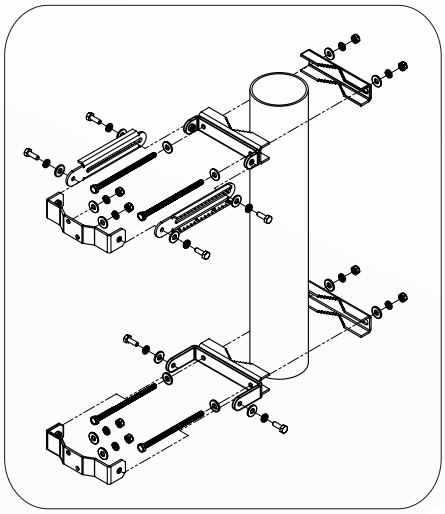

Any information furnished by Laird Technologies, Inc. and its agents is believed to be accurate and reliable. All specifications are subject to change without notice. Responsibility for the use and application of Laird Technologies materials rests with the end user, since Laird Technologies and its agents cannot be aware of all potential uses. Laird Technologies makes no warranties as to the fitness, merchantability or suitability of any Laird Technologies materials or products for any specific or general uses. Laird Technologies shall not be liable for incidental or consequential damages of any kind. All Laird Technologies products are sold pursuant to the Laird Technologies' Terms and Conditions of sale in effect from time to time, a copy of which will be furnished upon request. © Copyright 2011 Laird Technologies, Inc. All Rights Reserved. Laird, Laird Technologies, the Laird Technologies Logo, and other marks are trade marks or registered trade marks of Laird Technologies, Inc. or an affiliate company thereof. Other product or service names may be the property of third parties. Nothing herein provides a license under any Laird Technologies or any third party intellectual property rights.